Great Gear: Cordless Compressor

GUILD ◆ EDITION

How-To: Drawer Joinery

Woodsmith®

Woodsmith.com

Vol. 46 / No. 274

JAPANESE-INSIPIRED SIDEBOARD

Step-by-Step Plans:

- Round-Top Bookcase
- Workshop Coffee Center
- Waterfall Night Stand
- Kitchen Recycle Bin

Woodpeckers®

Precision Woodworking Squares

- One-piece central core.
- Stainless model includes scribing guides.
- Lip keeps the square flat on your work.
- Guaranteed perpendicular to ±.0085° for life.
- Available in inch or metric.

LIFETIME Woodpeckers GUARANTEE

Precision Woodworking Square
Includes a Woodpeckers wall-mountable wooden case
12"....$129.99
12" Stainless Steel....$149.99
Other Sizes Available on ***Woodpeck.com***

Precision T-Squares

- Scribing guides on 1/16" centers.
- Beveled edge reduces parallax.
- Tight tolerance laser-engraved scale.
- 600mm metric version available.

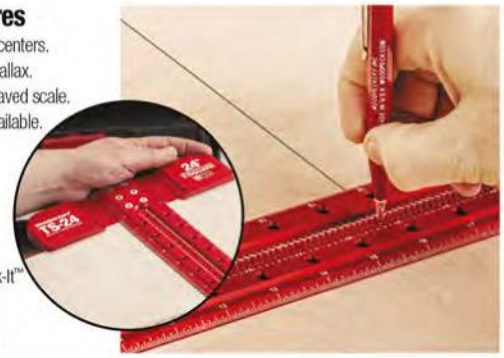

Precision T-Square
Includes a wall-mountable Rack-It™
TS-12 12"....$129.99
TS-24 24"....$149.99
TS-32 32"....$179.99

in-DEXABLE™ Combination & Double Squares

- Push-button index locks head at any full-inch.
- Laser-cut scribing guides for precision parallel lines.
- Retractable support keeps head aligned to your stock.

in-DEXABLE Squares
Includes a wall-mountable Rack-It™
Double 6"....$129.99
Center Finder 6"....$139.99
Combination 12"....$169.99
Protractor 18"....$239.99
Other Sizes Available on ***Woodpeck.com***

Clamping Squares PLUS & CSP Clamps

- Holds stock at right angles.
- Works inside or outside.
- Works with any clamp.
- CSP Clamps speed the job.

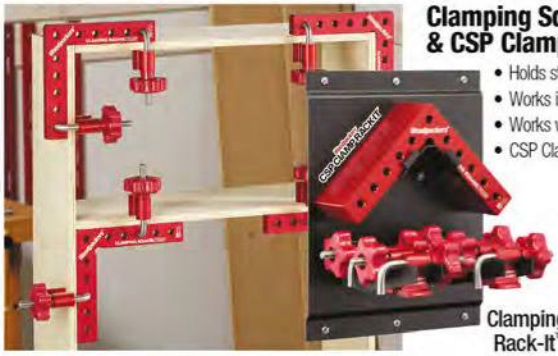

Clamping Squares PLUS Rack-It™ Kit....$269.99

CLAMPZILLA™ 4-Way Panel Clamp

- Applies pressure both directions.
- Works with material from 5/8" to 4".
- Improved vertical pressure.
- Flatter panels faster.

ClampZILLA
18" Capacity....$139.99
38" Capacity....$169.99
50" Capacity....$199.99

Dado Nut

- Full thread engagement with dado stacks on SawStop table saws.
- Unique 2-piece design.
- Simplifies every blade change; just one thing to juggle.

NEW TOOL

Dado Nut
For SawStop....$44.99

Rout-N-Plane™ Benchtop Board Mill

NEW TOOL

- Perfect for end grain cutting boards.
- Adjusts to work with almost any size or style router.
- Two sizes: 15" and 24" wide. Both work from 3/4" to 3" thick.
- When it won't fit your planer, plane it with Rout-N-Plane!

Rout-N-Plane
15" Benchtop Board Mill....$169.99
24" XL Benchtop Board Mill....$209.99

SANDSTAND™ Tilting Sander Base

- Turn your palm sander into a stationary sander.
- Works with most palm sanders.
- Angle adjusts from flat to 45°.
- Clamps or bolts to any work surface.

NEW TOOL

SandStand Tilting Sander Base....$109.99

Sander not included.

Woodpeck.com

MADE IN USA

AUTO-LINE™ DRILL GUIDE

- Perpendicular holes anywhere.
- Fence fits on all 4 sides.
- Works with most drills.
- Deluxe Kit includes extensions.

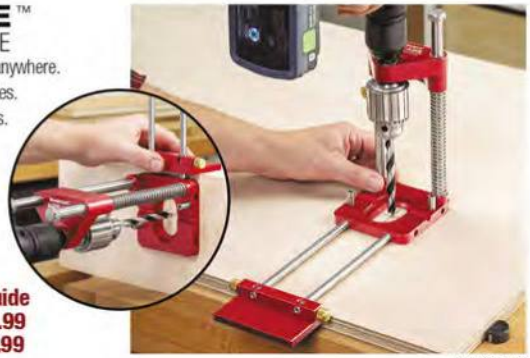

Auto-Line Drill Guide
Drill Guide....$299.99
Deluxe Kit....$399.99

Drill not included.

MULTI-ROUTER

The Joinery Machine

- Heavy-duty, true 3-axis linear control.
- Machined aluminum templates for flawless joinery.
- Built-in dust collection.

Multi-Router
The Joinery Machine
w/Dust Cabinet....$2999.00
w/Mortise & Tenon Package....$4199.00
More Options Available on ***Woodpeck.com***

Table Saw not included.

THIN RIP GUIDE®

- Safe, accurate jig for repeat cutting of thin strips.
- Works with 3/8" x 3/4" T-slot table grooves.
- Easily calibrated scales in both inch & metric.
- Ball bearing contact for smooth feeding.

ThinRip Guide
Includes a wall-mountable Rack-It™
....$169.99

Table Saw not included.

Iron-Grip™ Small Parts Holder

NEW TOOL

- Rout small parts safely & accurately.
- Works with bearing guided bits or table-mounted fences.
- Quick-release jaw for fast change over.

Iron-Grip Small Parts Holder
....$169.99
Extended Capacity Fence....$19.99

Spline Jig

NEW TOOL

- Works with both table saw and router table.
- Spline grooves or dovetail keyways.
- Cut splines in projects up to 36" long.
- Stops included for repeat positioning.

Spline Jig....$159.99

Hold-down clamps sold separately.

StealthStop™ Miter Gauge

- Fits all 3/8" x 3/4" miter gauge slots.
- Patented leaf springs ensure perfect fit.
- Rear fence extends from 21" to 29".
- Micro-adjustable flip stop.
- Positive stops for standard angles.
- Optional zero-clearance inserts.

StealthStop
w/Fence & Stealth Stop
Miter Gauge....$119.99

Table Saw not included.

HexScale Rules

- Six rules in one!
- Inch & metric scales in 3 layouts.
- Right-to-left, left-to-right & centering.
- Stop simplifies repeat marking.
- 6", 12", 24" & 36" lengths.

HexScale Rule
Includes a wall-mountable Rack-It™
Set....$159.99
Individual Sizes Available on ***Woodpeck.com***

Visit ***Woodpeck.com*** *for hundreds of other American Made Tools!*

Woodsmith®

AN ACTIVE INTEREST MEDIA PUBLICATION

EXECUTIVE EDITOR Phil Huber
SENIOR EDITOR Erich Lage
ASSISTANT EDITOR Rob Petrie

EXECUTIVE ART DIRECTOR Todd Lambirth
SENIOR ILLUSTRATOR Dirk Ver Steeg
SENIOR GRAPHIC DESIGNERS Bob Zimmerman, Becky Kralicek
CONTRIBUTING ILLUSTRATOR Erich Lage

CREATIVE DIRECTOR Chris Fitch
PROJECT DESIGN EDITOR Dillon Baker
PROJECT DESIGNER/BUILDER John Doyle
CAD SPECIALIST/BUILDER Steve Johnson
SHOP MANAGER Marc Hopkins
CONTRIBUTING PHOTOGRAPHER Chris Hennessey

ADVERTISING DIRECTOR Jack Christiansen
847-724-5633
jchristiansen@aimmedia.com
AD PRODUCTION COORDINATOR Julie Dillon
GRAPHIC DESIGNERS Julie Green, Anna Otto

HOME GROUP
ACTIVE INTEREST MEDIA

SENIOR VICE PRESIDENT, CONTENT Rob Yagid
DIRECTOR, SALES OPERATIONS Heather Glynn Gniazdowski

ACTIVE INTEREST MEDIA

CHAIRMAN & CEO Andrew W. Clurman
CHAIRMAN EMERITUS Efrem Zimbalist III
CHIEF OPERATING OFFICER Brian Van Heuverswyn
CHIEF FINANCIAL OFFICER Adam Smith
CHIEF REVENUE OFFICER Gary DeSanctis
SENIOR VICE PRESIDENT, MARKETING Erica Moynihan
VICE PRESIDENT, MARKETING Amanda Phillips
VICE PRESIDENT, CIRCULATION Paige Nordmeyer
VICE PRESIDENT, SALES OPERATIONS Christine Nilsen
VICE PRESIDENT, EVENTS Julie Zub
VICE PRESIDENT, DIGITAL PRODUCT DEVELOPMENT Ashley MacDonald
VICE PRESIDENT, STRATEGY & RESEARCH Kristina Swindell
DIRECTOR, HUMAN RESOURCES Scott Roeder
DIRECTOR, PRODUCTION Phil Graham
DIRECTOR, RETAIL SALES Susan A. Rose
DIRECTOR, INFORMATION TECHNOLOGY Andrew Shattuck

Woodsmith® (USPS 465-410) (ISSN 0164-4114) is published bimonthly by the Home Group of Active Interest Media Holdco, Inc. The known office of publication is located at 2143 Grand Ave, Des Moines, IA 50312. Periodicals Postage Paid at Des Moines, IA, and additional mailing offices. Postmaster: Send address changes to Woodsmith, Box 37274, Boone, IA 50037-0274. Postmaster: Send all UAA to CFS. (See DMM 507.1.5.2); NON-POSTAL AND MILITARY FACILITIES: Woodsmith, Circulation Department, PO Box 37217, Boone, IA 50037" Printed in U.S.A.

Woodsmith® is a registered trademark of Active Interest Media Holdco, Inc.
Copyright© 2024 Active Interest Media Holdco, Inc. All rights reserved.
Subscriptions: $29/year, Single copy: $7.99
Canadian Subscriptions: Canada Post Agreement No. 40038201. Send change of address information to PO Box 881, Station Main, Markham, ON L3P 8M6.
Canada BN 82564 2911

WoodsmithCustomerService.com

ONLINE SUBSCRIBER SERVICES

- **VIEW** your account information
- **PAY** your bill
- **RENEW** your subscription
- **CHANGE** your mailing or e-mail address

CUSTOMER SERVICE Phone: **800-333-5075** weekdays

SUBSCRIPTIONS
Customer Service
2143 Grand Avenue
Des Moines, IA 50312
subscriptions@aimmedia.com

EDITORIAL
Woodsmith Magazine
2143 Grand Avenue
Des Moines, IA 50312
woodsmith@woodsmith.com

from the editor

Sawdust

A quick glance at the contents page shows the easy-to-guess theme of this issue: storage solutions. Each of the projects offers a unique take on organizing, displaying, and keeping your essentials. There isn't a part of the home that isn't touched by one or more of the pieces.

I propose that the parallel theme is imagination. Each of the projects began with ideas from our design team (along with suggestions from readers). The ideas often start with something like "Suppose a bookcase had a round top. How would you do that?" Turn to page 36 to see Chris Fitch's answer to that. Shop manager Marc Hopkins turned the idea into reality.

In the same way, these plans offer you ideas to ponder, and "Suppose" questions to consider. I'm eager to see how you bring them to life in your shop.

Here's another question to consider: What would it be like to learn about woodworking design and history with other passionate woodworkers? You can join me this September for a tour of England. Anissa Kapsales, a senior editor at *Fine Woodworking* will join me in guiding a small group (up to 30) of woodworkers through musuems, historic homes, and even a boxwood plantation. To find out how to join me, check out *Woodsmith.com/UKTour*. Since space is limited, you'll need to act quickly. I hope to see you there.

contents

No. 274 • Aug/Sept 2024

Projects

designer project
Hokkaido Sideboard 26
The raised top and case, along with the shapely legs give this piece a light, graceful appearance.

heirloom project
Round-Top Bookcase 36
While the storage space is nice, the real treat of this project is learning to make the curved top.

shop project
Coffee Center 46
This easy-to-build cabinet holds all the essentials to power you through long days in the shop.

designer project
Waterfall Nightstand 52
Here's a stylish piece that shows off the visual impact of veneer while adding storage to your bedroom.

kitchen project
Recycling Bin. 60
A compact cabinet with tilt-out bin makes kitchen cleanup easier than ever.

Departments

from our readers
Tips & Techniques 6

finishing room
All About Wax Finishing. 12

woodworking technique
Table Saw Drawer Joinery 16

great gear
New Cordless & Air Tools 22

Sources 66

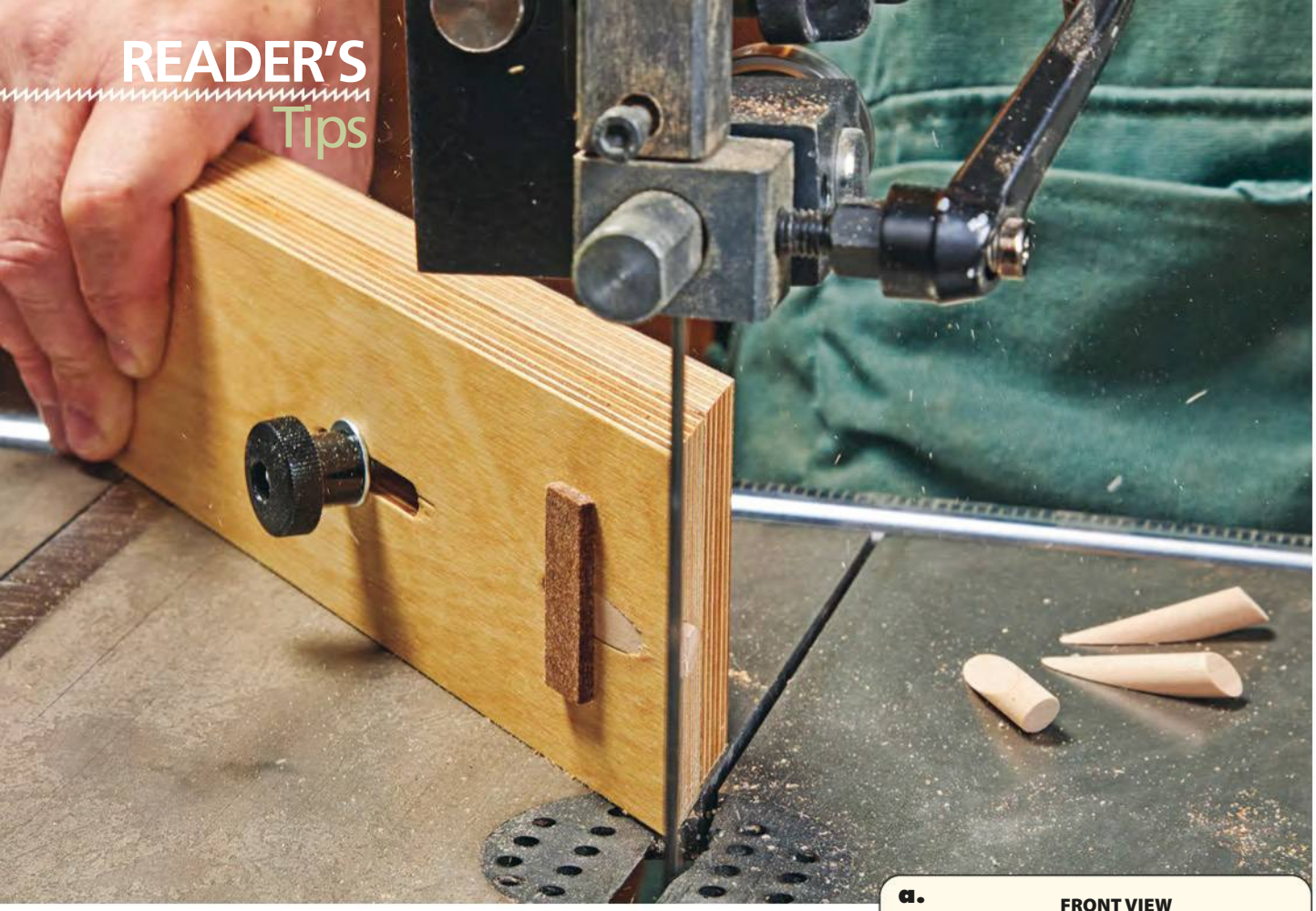

Pocket Hole Plug Jig

I like to build small step stools for children, held together by pocket screws and glue. They come together quick, and all joints are made from the bottom. This makes for strong stools, but most commercial plugs are overly long, and it's hard to maneuver a saw in to trim them.

The jig shown here allows me to trim the dowels to size before assembly. The back attaches to a miter gauge, with an adjustable front piece held on by a threaded knob and carriage bolt (detail 'b'). Before attaching the front piece though, drill a pocket hole through it to accept the dowels (detail 'a'). A hardboard stop is then attached to bottom out the dowel. Once you've got a test pocket hole, adjust the jig for the length of dowel you need. Once it fits to your liking, lock the jig in place and trim all remaining plugs.

Robert Britton
Georgetown, Minnesota

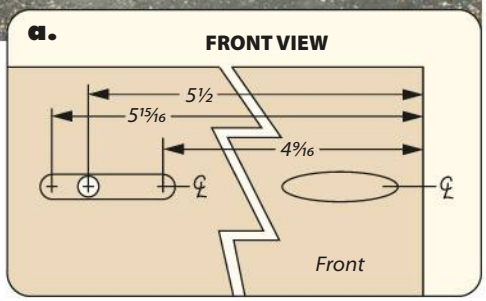

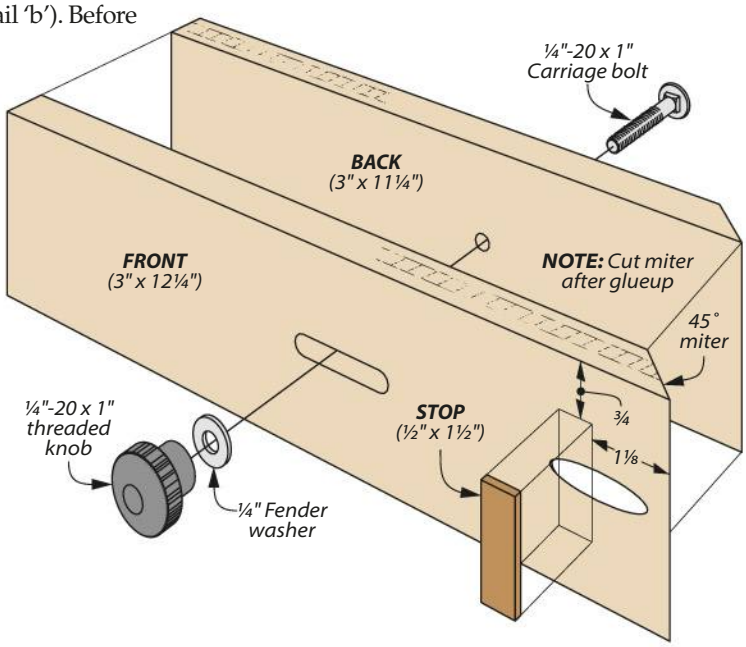

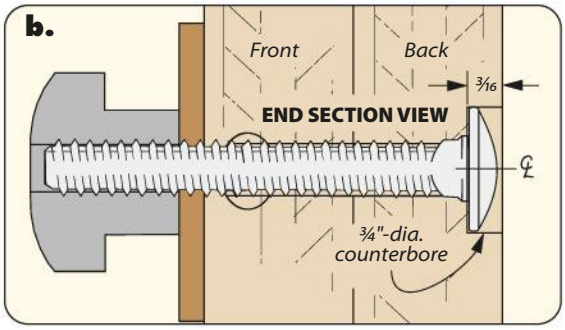

Compiled by: Rob Petrie; Built by: John Doyle

EXCELLENT ACCURACY & RELIABILITY

Quality machines with proven performance.

QUALITY TOOLS
SHOP FOX®
SINCE 1989

grizzly.com/shopfox

TWO YEAR WARRANTY

Available at these fine retailers:

grizzly.com JB TOOLS ACME TOOLS THE TOOL NUT

& MORE!
See website for details

Glue-Reinforced Edges

When I'm making unique shapes — especially if there's going to be multiples — there's nothing better to have than a template. Hardboard, MDF, and plywood are all great materials to use, but the bearings on a pattern bit can compress their edges through use.

To keep that from happening, I use a bit of CA glue to strengthen the edges of my templates. All you have to do is, after making the template, run a bit of CA glue along the edges. After it's been applied, use a few spritzes of accelorator to set the glue.

James Powell
Waukesha, Wisconsin

QUICK TIPS

Digital Honing Guide. *Jim Berry* of *Royal Oak, MI* uses his digital angle gauge to establish the proper honing angle for his plane irons or bench chisels. He zeroes the gauge on his workbench, then slides the iron or chisel in the honing guide until the readout matches the desired honing angle.

Perpendicular Pinning. *Richard Alvidrez* of *Los Angeles, CA* noticed it can be difficult to keep his pin nailer perfectly level when joining narrow pieces — the nail sometimes pokes through the second piece on the other side. However, gluing a bubble level was an easy what to keep his pinner perpendicular.

QUICK TIP

Scribe with a Handscrew. *Logan Wittmer* of *Runnells, IA* has a clever way to make sure his dovetails all begin with a consistent baseline. First, he positions a pencil in a handscrew clamp (using the mating board to determine the height), then drags the pencil and clamp across to draw the baselines without needing to measure for each workpiece.

SUBMIT A TIP TO WIN

GO ONLINE

If you have an original shop tip, we would like to hear from you and will consider publishing your tip in one or more of our publications. So jump online and go to:

SubmitWoodsmithTips.com

You'll be able to tell us all about your tip and upload your photos and drawings. You can also mail your tips to "Woodsmith Tips" at the editorial address shown on page 2. We will pay up to $200 if we publish your tip.

MAKING MONEY SHOULDN'T BE JUST A HOBBY

Turn passion into profit with the Fusion Maker from Epilog:

- Up to 60-inches-per-second engraving speeds
- IRIS™ Camera System for artwork placement
- No Internet connection required
- 2-year warranty
- Direct US-based support via phone, chat, & email

Contact us for more information & **free samples!**

Starting at $9,995*

*U.S. Pricing Only

EpilogLaser

888.437.4564 | sales@epiloglaser.com
epiloglaser.com/woodsmith

Mobile Cutoff Bin Upgrade

The cutoff bin from issue 131 of *ShopNotes* has been a part of my own shop for years now. Of course, like any addition to my shop, I've made it my own.

While the bin is great for large sheets and medium-sized scraps, I wanted to further divide the compartments to hold narrow cutoffs and dowels. All I had to do was cut a plywood divider to size and use a few conduit straps to keep it held in place.

Eric Oslund
Millersville, Missouri

NEW Online Class!

Build this Mobile Cutoff Bin along with us at: Woodsmith.mykajabi.com

QUICK TIP

Pringles Paint Saver. *Alberto York* from *Malden, MA* found a creative use for an empty *Pringles* can when painting. After drilling a hole in the lid and cutting a slit to the edge, he was able to slip the lid onto the handle of this roller. When not in use, he slides the roller into the can to keep paint from slopping around. Plus, the can keeps the roller sealed up and keeps the paint from drying if you have more painting to do tomorrow.

DIGITAL WOODSMITH

RECEIVE FREE ETIPS BY EMAIL

Now you can have the best time-saving secrets, solutions, and techniques sent directly to your email inbox. Simply go to: ***Woodsmith.com*** and click on,

Woodsmith eTips

You'll receive one of our favorite tips by email each and every week.

Hole-Sawn Tenons

Tenoned dowels make for unique stretchers and legs on a variety of projects. However, creating that tenoned end usually requires some turning and fine-tuning — which is why I employ this method instead.

Begin by chamfering the end with a block plane (Figure 1). Then select a hole saw to match your mortise. You could use a battery-powered hand drill, but I prefer to use a hand brace, as I find I do a better job of staying straight-on when working by hand. After reaching the proper depth, use a knife or saw to remove the remaining waste.

Keagan Burch
Kannapolis, North Carolina

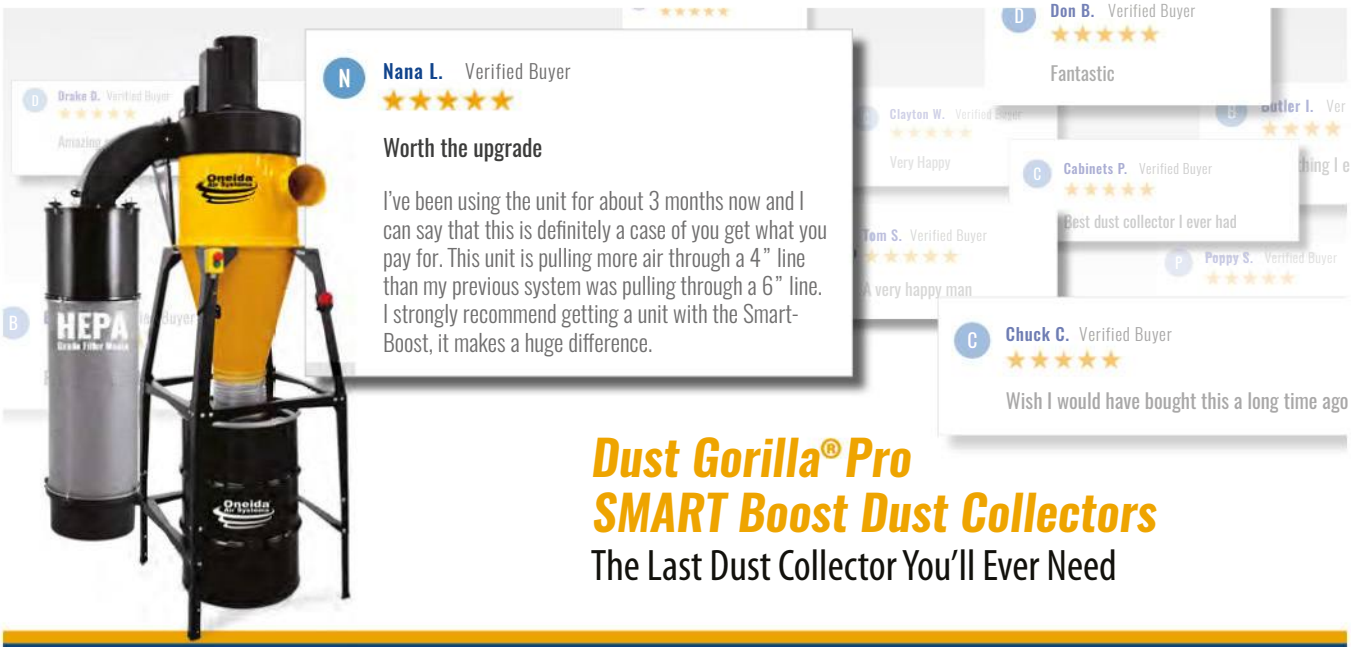

Dust Gorilla® Pro
SMART Boost Dust Collectors
The Last Dust Collector You'll Ever Need

Oneida Air Systems
The Industry Leader in Dust Collection
Made in the U.S.A.

Reach up to double the CFM and suction power of traditional, fixed RPM collectors with the Dust Gorilla Pro. Its unique Smart Boost technology ensures the motor is always working at full capacity, with a constant amp draw, by increasing fan speed as needed. Truly revolutionary!

oneida-air.com

Wax Finishing

What do you want from a finish? This question dogs me. That a project I make needs (and gets) a finish is a given. However, I rarely give the purpose much thought. If pressed, I'd probably mutter something about appearance or adding protection.

Some finishes bring out colors and grain in wood that appeals to me. Other finishes form durable surface coatings. The trouble is I end up putting the same finish on every project, no matter what it is. Mastering a finishing technique and product makes sense. It simplifies your finishing routines and reduces analysis paralysis. Many woodworkers default to a "bombproof" finish.

I began to wonder, is that appropriate for all projects? High-durability coatings attempt to shrug off the effects of daily life. However the finish will fail eventually. But projects age with use and time, and I've decided to accept (embrace?) that in my decision-making.

Written by: Phil Huber

▲ Scoop out a small amount of wax and place it in the center of a clean cotton cloth (well-worn T-shirts work great).

▲ Twist the cloth to form a tight ball around the wax. With a little pressure, some wax will seep through the cloth.

▲ Apply a light coat of wax to the project. The surface should look shiny without leaving ridges of wax.

WHAT ABOUT WAX. A finish material I've been using recently is wax. You may be thinking that wax isn't a finish on its own. However, a wax finish is one of the options used in historic work in several woodworking traditions around the world.

A wax finish enhances the color and grain of the project, as you can see in the main photo on the previous page. We interact with furniture pieces with our hands as much as our eyes. The surface you feel with a wax finish reveals the grain and deliberate tool marks from construction more than any film-forming finish ever could.

I'll admit that a wax finish doesn't provide "maximum protection." I would argue that a mantel clock doesn't require multiple coats of lacquer in order to look great year after year. I made two worksurfaces for my office at *Woodsmith* that have a wax finish. More than a year later, they're doing just fine. A wax finish accepts — even invites — the evidence of use. The worn corners, the color change from hands rubbed on chair arms, and the various dents and dings weave together a story that adds to a project's appeal.

Illustrations: Bob Zimmerman

A double-boiler works great for melting hard wax

1

▲ Once the blocks of wax melt, you're ready to add the solvent, off heat. Just a little is necessary (about 10 percent by volume).

2

▲ Stir the solvent into the liquid wax in order to dissolve the two together. Keep stirring until the solution looks uniform.

3

▲ Allow the mixture to cool slightly, then pour it into a container for storage and use.

▲ Tinted wax contains pigments that settle into pores and the grain to add color or simulate age.

CLEAR WAX FINISH

Getting started with wax is as simple as purchasing a can of paste wax and grabbing a few cotton cloths. Clear paste wax works on the widest range of projects. With it you get a sheen that ranges from satin to glossy.

APPLICATION. The photos on the top of the previous page show one method for application. Once applied, allow the solvents to evaporate. This can take 30 minutes to an hour. It all depends on the solvent used and environmental conditions. Once dry, buff the surface with a cotton cloth, shoe shine brush, or a stiff felt block.

The key is applying the lightest possible coat. This was my biggest hurdle. I wanted to see the coat of wax on the surface. The problem, however, is that heavy applications form wax-bergs that resist polishing into a smooth surface. If this occurs, reapply some wax. The solvent will loosen the hardened wax, allowing you to lay down a lighter coat.

EASY RENEWAL. Over time and use, a wax finish wears down. You can bring it back to life by simply applying another coat of wax.

HOMEBREWED. For another level of control in your projects, you can mix your own paste wax. All you need is a block of wax and some solvent. The process is shown in the photos above. Here I'm using blocks of shellac wax. (You can find sources on page 66.) Beeswax and carnauba wax are common materials, too. The shellac wax is harder than beeswax and I like the khaki color it offers.

As for the solvent, I prefer to use turpentine, as I like the piney smell. Mineral spirits is often used. Citrus-based solvent isn't as harsh as the others.

COLOR & AGE. Clear wax isn't your only option. Tinted waxes are available in a range of shades. The two I use are

◀ White liming wax reverses the contrast of pores in dark colored or stained pieces. It even works on plywood and MDF panels.

shown in the lower left photos on the previous page. These add subtle color to unfinished or existing projects. I like using light brown-colored wax to freshen up heirloom pieces.

For a more bold effect, I use dark brown (or black) wax. The pigments settle into the pores of the wood for a more dramatic effect. This tinted wax simulates the buildup of grime in the corners and crevices that you see in antique pieces.

Tinted wax tones down bright colors, giving you more control over the final appearance. In the photos at right, you can see how this works with a painted project I demonstrated in a recent issue.

LIMING WAX. Speaking of contrast, white liming wax reverses the contrast of pores, turning them white as shown in the lower left photos on the previous page. This can give lighter wood species like oak or ash a bleached look that mimics a Danish soap finish.

Our role doesn't end when a project leaves the shop. Using wax as a finish allows for a project to age gracefully and be rejuvenated easily. W

▲ Layered finish techniques benefit from a final coat of wax. Here a dark colored wax tones down the bright paint and adds an aged look to corners and seams.

WAX TOUCHUP STICKS

Fix Flaws. Wax sticks makes it easy to fill small blemishes. It's best to wait to use these until the end of the construction and finishing process. You can mix colors to match the tones of the wood in your project.

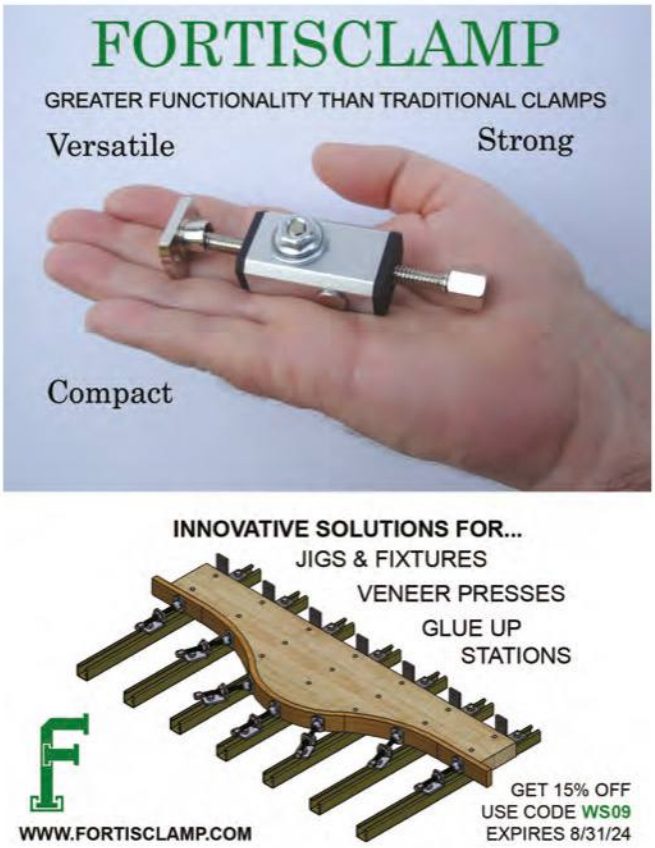

Fast & Functional Drawer Joinery

If I were to tally up my shop time, making drawers would account for a decent chunk. Drawer joinery is rarely intensive, but a good deal of the projects we build have at least one drawer — if not several.

Thankfully, there are enough ways to bring drawers together to keep the task interesting. How sturdy do these drawers need to be? How often will they be used? Will they sit flush with or proud from their case? Do I want to attach a false front? And, of course, that's before even considering the hardware.

WHAT'S THE DEAL WITH DRAWERS? I don't need to explain what a drawer is, but it is important to look at why they're built the way they are. Looking at the bare joinery of any drawer, you'll find that the front is always built more solidly than the back. The front drawer joint takes all the action, so it needs to be made accordingly.

The aesthetics of a drawer also play a large part. Simple, utilitarian joints may not look all that impressive, but they come together quick. Complex joints, like locking rabbets, require a bit more time to set up, but they make strong, light drawers with attractive details. False fronts may add some heft, but they offer a wide swathe of design options for wherever you want to take your project.

DRAWER JOINERY. Either way you slice it, it's the front that we're most concerned with, and that's where we'll focus here. There are three common joints I use when making drawers, and which one I go for depends on what it's going to house, where this project will live, and what look I'm aiming for.

Written by: Rob Petrie

THE BEST PINNER
TRUSTED FOR 20 YEARS
JUST GOT BETTER

GREX USA®

THE NEW GREX P635L 23 GAUGE HEADLESS PINNER

IWF
BOOTH B4446

CONTINUING A 20 YEAR LEGACY

The P635 wasn't just a tool; it was a revolution. Launched in 2004, it redefined the meaning of fine woodworking. With its unmatched level of features, precision and reliability, it quickly set itself apart as the "lexus of pinners" for the past two decades.

As we celebrate the 20th anniversary of the iconic P635, we're propelling into the future with the introduction of the enhanced P635L.

With new features like the auto-lockout with one-touch override and the on-board adjustable edge guide, the P635L is designed to make your work even more efficient.

We understand that investing in a tool is more than just a purchase; it's an investment in your craft, your passion, and your future. Get your own P635L and experience 20 years of innovation and craftsmanship with a tool that's built to last.

GREX P635L SUPER SALE

20% OFF

Celebrating 20 years of the iconic Grex P635

Limited time offer.
Own yours today.

FIND YOUR DEALER

888-447-3926 604-534-3688 www.grexusa.com

SIMPLE DRAWER JOINTS

I wouldn't call myself lazy, but I'll admit that I like taking the path of least resistance once in a while. So, when it comes to joinery, if I know I can make due with a simple joint then chances are that's what I'll do. The two you see at right can be made quickly, and both are more than sufficient at what they do.

RABBET JOINT. You don't get much simpler than a rabbet joint (upper right illustration). If I need to make some smaller drawers, especially if they'll be going in the shop or the garage, then a rabbet joint is a nice way to get the job done quick.

As you might've put together though, this joint does have a pretty big downfall: it's not very strong. The rabbet provides no mechanical support for the frequent pulling a drawer front will undergo, and the glue is adhering to end grain, making for poor gluing strength.

The answer here is fasteners. The easiest solution is what you see above. A row of nails through the side into the rabbetted front will support the joint, and angling them back will help prevent the front from pulling away from the sides through use. This works well on small drawers that will hold screws or washers, but if you're going bigger, you'll need to step up to using woodscrews, or even dowels to hold the front.

Regardless, this is still an easy, functional joint. However, it's usually too utilitarian for my tastes outside the shop. For a project I want to show off, I next look to another easy-to-make joint.

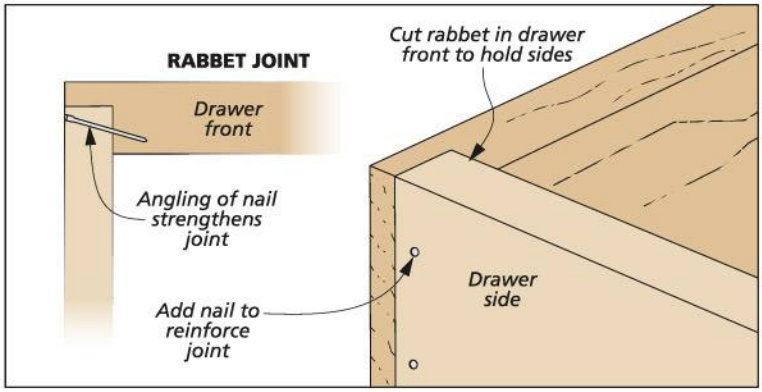

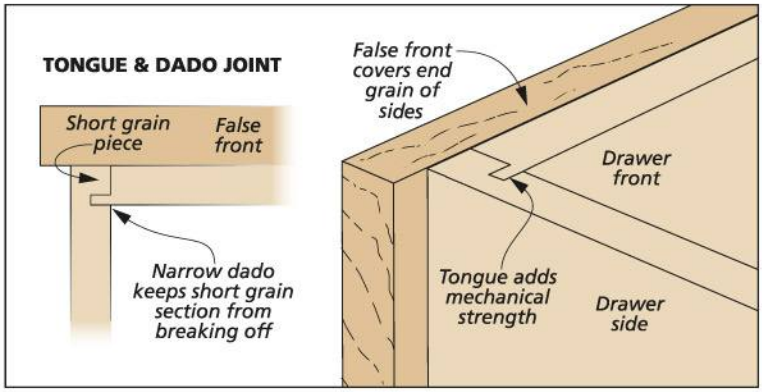

TONGUE & DADO. A tongue and dado joint (which you can see in the nearest drawing above) has a distinct mechanical advantage over the rabbet joint. Despite that, if I'm going for a tongue and dado front on my drawers, it's likely for a different reason.

As you can see in the top-down illustration, the tongue and dado drawer front leaves the sides' end grain exposed. This is where a false front comes in to hide that exposed end grain.

False fronts can be a nice addition on some pieces. If you want to use lightweight, stable plywood to make the drawers in a dresser with a hardwood case, then false fronts can preserve that look. A chamfer around a false front softens a drawer, while an ogee'd edge can make the drawers pop onto centerstage. However, using false fronts on a set of drawers adds a considerable amount of material to the project, not to mention the additional weight.

Tongue and dado drawer fronts are a nice middle-ground choice. It may take longer to size and locate the tongues and dadoes than it does to cut rabbets, but the joint provides more mechanical support while offering a wide variety of choices for style with the false fronts, even if it adds a bit of extra wood. Yet if you're looking for a joint that provides the benefits of both for a little extra shop time, then look no further than our third joint.

LOCKING RABBET

The last drawer joint I use is shown in the left illustrations. The locking rabbet is a classic drawer joint, and for good reason. It benefits from the same tongue-and-dado mechanical advantage as the previous joint, but it adds an additional front lip. The lip covers the end

LOCKING RABBET JOINT ANATOMY

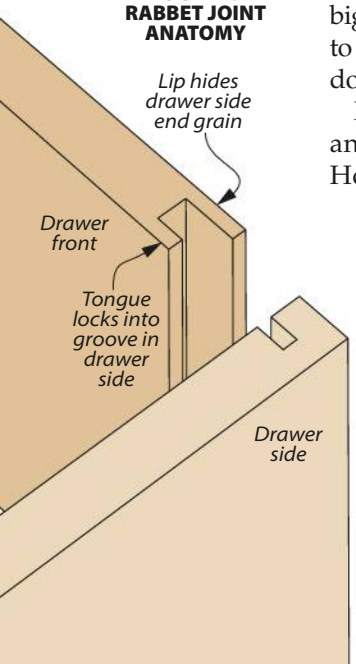

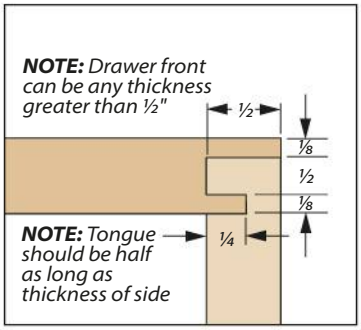

grain and locks the two pieces together. Though the glue surfaces here are end grain, they adhere together quite securely in this orientation. The drawers themselves will be recessed in their case, sitting flush to its front. This creates a similar look to the rabbet joint, but with the added "locking" detail and a sturdier connection.

The downfall of locking rabbets is that they're a bit finnicky. There's a certain procedure to follow (which we'll cover on the next page), and you'll need to make some test cuts. Thankfully, if you're making multiple drawers, the joinery can be cut on each drawer after you've dialed in the correct fit for that cut.

JOINT LAYOUT. The detail at the bottom of the previous page shows a top-down view of a locking rabbet. In this instance, the front piece is ¾" thick while the sides are ½" thick. You can vary the thicknesses, but there's two important things to note.

First, the tongue and dado should extend though half the thickness of the side. This will keep the tongue sturdy enough to prevent it from snapping off in the joint when pulled.

Second, no matter how small the drawer, the front needs to be at least ½" thick. If you go any thinner than that the tongue or lip will be more likely to snap off than create a strong joint.

MAKING THE JOINT. In my opinion, the two best ways to make a locking rabbet joint are either at the table saw or at the router table. Both work well, and the idea is the same, only with a different orientation. On the next page I'll walk you through my preferred method, which is over at the table saw.

▲ As the name implies, the locking rabbet joint interlocks the sides and front of drawer, creating a sturdy and intriguing joinery detail that masks the sides' ends.

WHAT ABOUT THE BACK? As I mentioned earlier, the back piece in a drawer isn't under much stress, so it doesn't need much in the way of joinery. A simple glued-up rabbet will do the job, but a tongue can add strength.

LOCKING RABBET JOINT

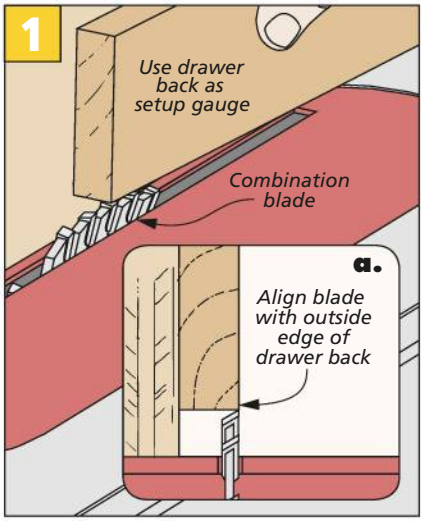

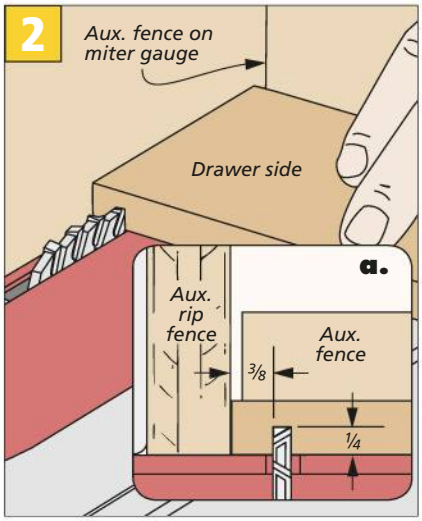

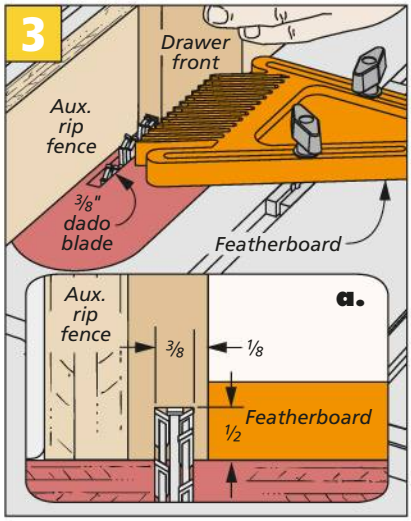

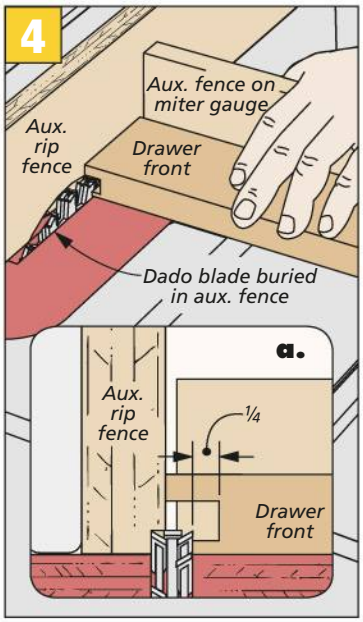

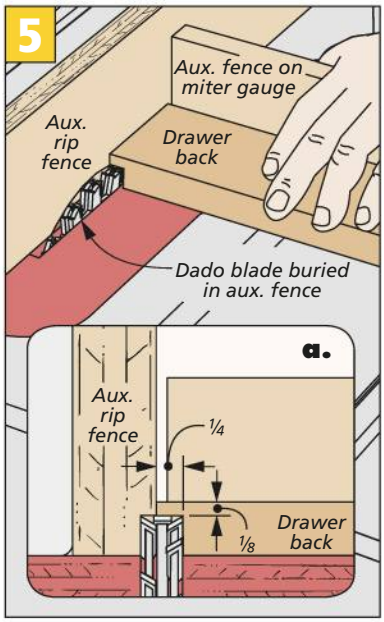

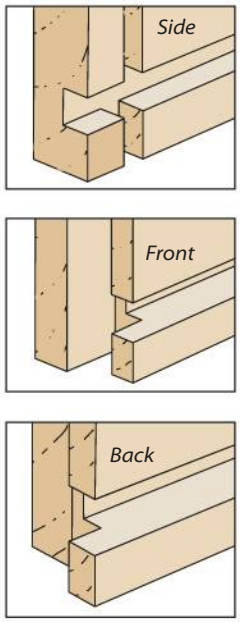

The Grooves. The left illustrations show what the grooves for the bottom panel look like in a finished piece. I cut the grooves 1/4" deep and 1/4" up from the bottom edge. The grooves intersect parts of the joints, but this won't interfere with the strength of the joints. Since my drawer bottoms are almost always plywood, I prefer to start with a 1/8"-wide blade so I can sneak up on a nice, snug fit for the panels.

What you see above are the steps to make a locking rabbet joint at the table saw. Here the front piece is 3/4" thick with the back and sides at 1/2" thick. It can take some dialing-in, but once the setup is in place, cutting these is a pretty quick job.

SIDE DADOES. The first thing to address are the dadoes in the sides. Since the tongues in the front are only 1/8", a standard combination blade will do the job fine. You'll first need to set the rip fence using the back piece as a setup gauge (Figure 1). Locate the fence so the face is flush with the blade. From there you can cut the dadoes, as in Figure 2. Use an auxiliary fence on your miter gauge to prevent chipout.

TONGUE & LIP. Next comes the front piece. The first step is to create the slot in the end that fits the "nub" we just created on the front of the sides. This is done with a dado blade and a vertical cut (Figure 3). I recommend using a featherboard and a backer board for a clean, safe cut. Then, bury the dado blade in an auxiliary rip fence and trim the tongues to fit their dadoes (as shown in Figure 4).

BACK. At this point you can cut the tongues in the back. Rabbet them as in Figure 5 to fit the dadoes. Add the grooves for the plywood panel next, then cut it to size. Now you should be ready to glue up some strong and stylish drawers. W

ULTRA·SHEAR™
by Woodpeckers®

Check out ***woodpeck.com*** for a full line of Ultra-Shear Saw Blades and Router Bits.

ROUTER BITS

Save money and enjoy the performance of premium grade, American Made Ultra·Shear Router Bits when you buy direct from the factory in Strongsville, OH.

CARBIDE INSERT RABBETING

This 3-flute rabbeting bit creates smoother rabbets faster than typical 2-flute designs. Inserts can be rotated four times.

US5RBT Carbide Insert 3-Flute Rabbeting, 1/2" Shank.....~~$57.93~~ **SALE $49.99**

More sizes & options available at woodpeck.com.

CARBIDE INSERT SPOILBOARD

Perfect for end-grain cutting boards and slabs. Inserts have 4 edges. Rotate when dull, replace after all edges used.

US515SF-SET Carbide Insert Spoil Board Bit, 3-Flute, 1-1/2" Dia., 1/2" Shank, Set w/3-Pk 0.47 Square Inserts .....~~$82.78~~ **SALE $64.99+FREE* Shipping!**

CARBIDE INSERT CHAMFER

The last Chamfer Bit you'll ever buy! Rotate inserts when dull. Replace inserts when all 4 edges used.

US5112-45ICH Carbide Insert Chamfer Bit, 2-Flute, 45°, 1-1/8" Dia., 1/2" Shank.....~~$57.93~~ **SALE $49.99**

US2112-45ICH Carbide Insert Chamfer Bit, 2-Flute, 45°, 1-1/8" Dia., 1/4" Shank.....~~$57.93~~ **SALE $49.99**

COMPACT COMPRESSION PATTERN & FLUSH TRIM

The ultimate bit for creating tearout-free cabinet parts from thin veneer plywood.

US2512UC Solid Carbide Compact Compression Pattern & Flush Trim, 2+2 Flute, 1/2" Dia., 1/4" Shank,1-1/8" Cut .....~~$118.74~~ **SALE $99.99+FREE* Shipping!**

FLUSH TRIM SPIRAL

With 2" of cut length this 1/2" diameter bit is perfect for template routing furniture parts.

US5200FTU Solid Carbide Spiral Flush Trim, 2-Flute, 1/2" Dia., 1/2" Shank, 2" Cut Length, Up-Cut .....~~$105.86~~ **SALE $89.99+FREE* Shipping!**

JUICE GROOVE

3 profiles to match any cutting board size or style. Template guide bushing follows 1/4" thick pattern.

US2JG-4PC Juice Groove Bit 4-Pc Set, 1/4" Shank: *(3/8" Nose, 5/16" Cut Length) (1/2" Nose, 5/16" Cut Length) (1/2" Nose, 45°, 1/4" Cut Length)* & Template Guide Bushing Set .....~~$181.03~~ **SALE $149.99+FREE* Shipping!**

SAW BLADES

40 TOOTH CROSS CUT & RIP

If you're looking for a blade to live on your table saw 95% of the time, you just found it. The carefully engineered tooth geometry delivers glass-smooth cross-cuts and scratch-free rips in hardwoods, softwoods, plywood and MDF.

10" x 40, 5/8" Arbor, Full or Thin Kerf
~~$169.99~~ **SALE $149.99 +FREE* Shipping!**

30 TOOTH GLUE LINE RIP

Our new 10" Glue Line Rip Blades produce glue-up ready rip cuts in hardwoods and softwoods. When invisible glue lines are the goal, this is the blade.

10" x 30, 5/8" Arbor, Full or Thin Kerf
~~$164.14~~ **SALE $129.99 +FREE* Shipping!**

20 TOOTH THICK STOCK RIP

While it might seem backwards to want fewer teeth when you need to cut more material, it's all in the geometry. The teeth are optimized for minimal resistance even when feeding aggressively.

10" x 20, 5/8" Arbor, Full or Thin Kerf
~~$137.87~~ **SALE $109.99 +FREE* Shipping!**

80 TOOTH MITER SAW

This is the ultimate blade for your sliding compound miter saw. Hook and clearance angles are optimized for flawless crosscuts and miters. Available in both 10" and 12".

10" x 80, 5/8" Arbor
~~$168.91~~ **SALE $149.99 +FREE* Shipping!**

12" x 80, 1" Arbor
~~$137.87~~ **SALE $159.99 +FREE* Shipping!**

FLAT TOP GROOVING

When you need flawless, flat-bottomed cuts, our 40-Tooth Flat Top Grooving Blade delivers. The chisel tooth design yields a perfectly square groove.

10" x 40, 5/8" Arbor

1/8" Kerf
~~$166.78~~ **SALE $149.99 +FREE* Shipping!**

NEW! 3/16" Kerf
~~$186.83~~ **SALE $179.99 +FREE* Shipping!**

NEW! 1/4" Kerf
~~$196.86~~ **SALE $189.99 +FREE* Shipping!**

For the first time in a generation, woodworkers have a new and better choice for their table saws. Introducing Ultra·Shear Saw Blades; meticulously crafted American-made saw blades engineered and built for professional woodworkers.

Each plate for these new carbide-tipped saw blades is carefully heat treated, tempered, tensioned, and smithed to ensure glass smooth cuts in hardwood, softwood and man-made materials. Every tooth is ground with hook, top and side clearance angles optimized to deliver unmatched cut quality and whisper-quiet operation.

So, if you're ready to experience a top-quality table saw blade, produced right here in America, look no further than Ultra·Shear.

Whether you're cutting tiny 1/8" box joints or making a dado with multiple cuts, you'll get a smooth, square bottom.

FREE SHIPPING WHEN YOU SPEND $50 ON ULTRA·SHEAR CUTTERS & BITS
CANNOT BE COMBINED WITH ANY OTHER PRODUCTS

Visit **Woodpeck.com** for hundreds of other American Made Tools!
Woodpeckers, LLC • Strongsville, Ohio • 800·752·0725

MADE IN USA

*All prices subject to change without notice. FREE Shipping valid for a limited time and to US 48 states only.

Great Gear On-the-Go

▲ The P635's lightweight, aluminum body is easy to maneuver and work with all day.

Before making the pivot into fine woodworking, I spent a number of years as a general contractor. Today I still spend plenty of evenings and weekends helping friends and family fix up this or that, and I've always got my eye out for must-have tools for on the go. The selection you'll find here are a few I've recently found quite useful, both in the shop and on-site.

GREX P635 PIN NAILER

The first tool on the list is the P635, a pneumatic pin nailer from *Grex* sized for 23-gauge headless pins up to 1⅜" long. *Grex*'s P6 series features a number of 23-gauge models, but I prefer the P635.

Written by: Rob Petrie

It's light and easy to maneuver, and if I need to use a nail longer than 1⅜", chances are I'd use my brad nailer.

The first thing I noticed about the P635 is the aluminum body. It's a sturdy tool, but also quite light. The extruded aluminum magazine slides nicely, and it automatically adjusts to the length of nail being used; no need to fiddle with the adjustments when changing lengths. Plus, the swiveling coupler keeps the hose from kinking.

Performance-wise, I'm happy with the P635. It had no trouble pinning ¼" black walnut trim onto a bookcase, or driving longer pins through ¾" plywood to secure a butt joint before screwing it. Though the P635 may run you more than some pin nailers on the market, its quality justifies its $200 price tag.

Slide the edge guide in place and tighten knob to lock

Illustrations: Bob Zimmerman

▲ The three LED lights all pivot, as does the head they're attached to, allowing you to aim the light as needed.

▲ Pointing the lights at the ceiling provides an excellent indirect light source when working in areas without lighting installed.

▲ The extending neck allows the tower to reach up to 7' high and rotates for 360° adjustment.

MILWAUKEE ROCKET TOWER

The M18 ROCKET tower is an upgrade on *Milwaukee*'s previous tower, and it comes with some nice additions. First, this model is twice as bright as its predecessor (at 6000 lumens). Along with the articulating head and extending neck, it's easy to set up for either direct light on precise work, or as indirect light for more general tasks.

The tower also functions as a charger for *Milwaukee*'s M18 batteries. Though I questioned how useful this feature was at first, it is nice to have one less item to carry.

In terms of portability, the new ROCKET tower also outshines its earlier version. As you can see at left, the tower features two handles: one balanced for a vertical orientation and one for horizontal. The tower itself weighs just over twenty pounds, so it's not difficult to lug around, but when carrying a number of tools, the handles go a long way in easing the burden. All in all, *Milwaukee*'s ROCKET tower is a great addition for anyone who needs an on-the-go light source.

MILWAUKEE QUIET COMPRESSOR

The last tool here is another from *Milwaukee*: a battery-powered, 2-gallon air compressor. A mobile air compressor is a welcome addition anywhere for me, so I was excited to give this one a try.

The first thing I noticed is how little noise the compressor makes. *Milwaukee* advertises it as running at 68dB, and though the

▲ The tower features USB-A and USB-C chargers to keep phones or speakers powered-up while you work.

▲ Using an extension cord to connect the tower to an outlet allows it to recharge the battery docked inside.

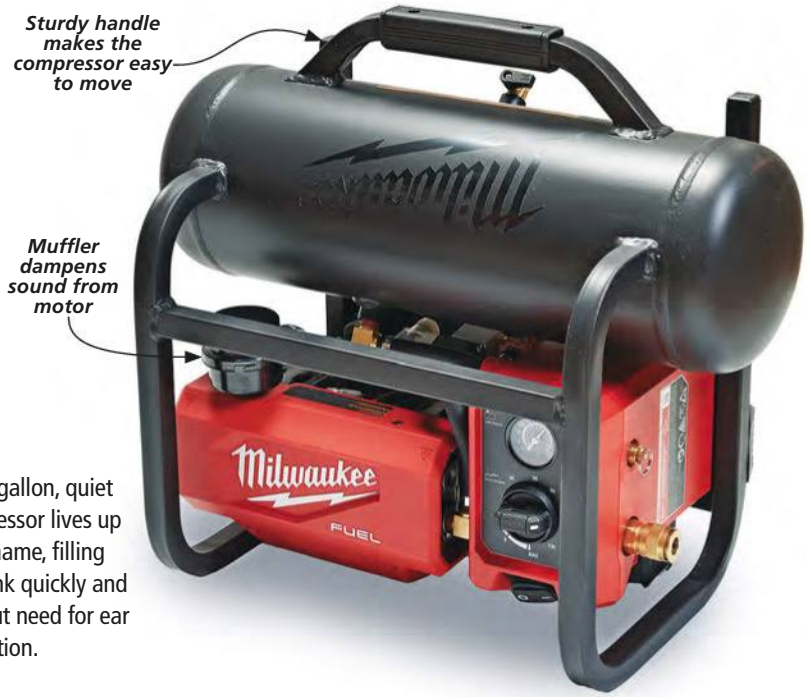

motor will reach up to 75dB as the tank fills and the compressor has to work harder, it's still a remarkably quiet tool.

In practice, this compressor is great for smaller gauge nails (finish, brad, or pin), for quickly filling up a low tire, or for blowing the sawdust off a workpiece. However, the small tank runs out fast when using impacts, so don't expect this to be an automotive workhorse.

▶ This 2-gallon, quiet compressor lives up to its name, filling the tank quickly and without need for ear protection.

While overall I like this air compressor, it does have one big flaw. When the tank is full, the output dial won't budge. If you need to use a tool with a different output, you'll have to drain the tank, adjust the dial, then let it fill again. For me, this wasn't a dealbreaker, but it's something to keep in mind for the work you'll need it to do. W

Written by: Rob Petrie; Project Design: Chris Fitch

Hokkaido Sideboard

Redefine the space in your home with this sideboard inspired by modern Japanese furniture designs.

Furniture has a fascinating way of shaping the space around it. In large rooms the furniture divides and defines. In smaller rooms that same furniture seems to expand the area and give it life.

The sideboard you see here was inspired by a selection of pieces manufactured in the Hokkaido region of Japan. Interestingly, these designs were based on Dutch furniture, with the intent of recreating the aesthetic of grand European and American homes with a smaller footprint to acommodate typical Japanese housing.

Here you'll find a lifted case and top that provide an airy sense of minimalism. Four sturdy drawers and two compartments with shelves provide plenty of storage despite the small footprint. Additionally, the back panels (shown below) allows this sideboard to function well as either a centerpiece or as a wallflower.

▲ Red alder hardwood makes a back that's as beautiful as the front, along with sturdy construction throughout. Baltic birch plywood makes for strong, stable drawers that run on hardwood guides.

Illustrations: Dirk Ver Steeg

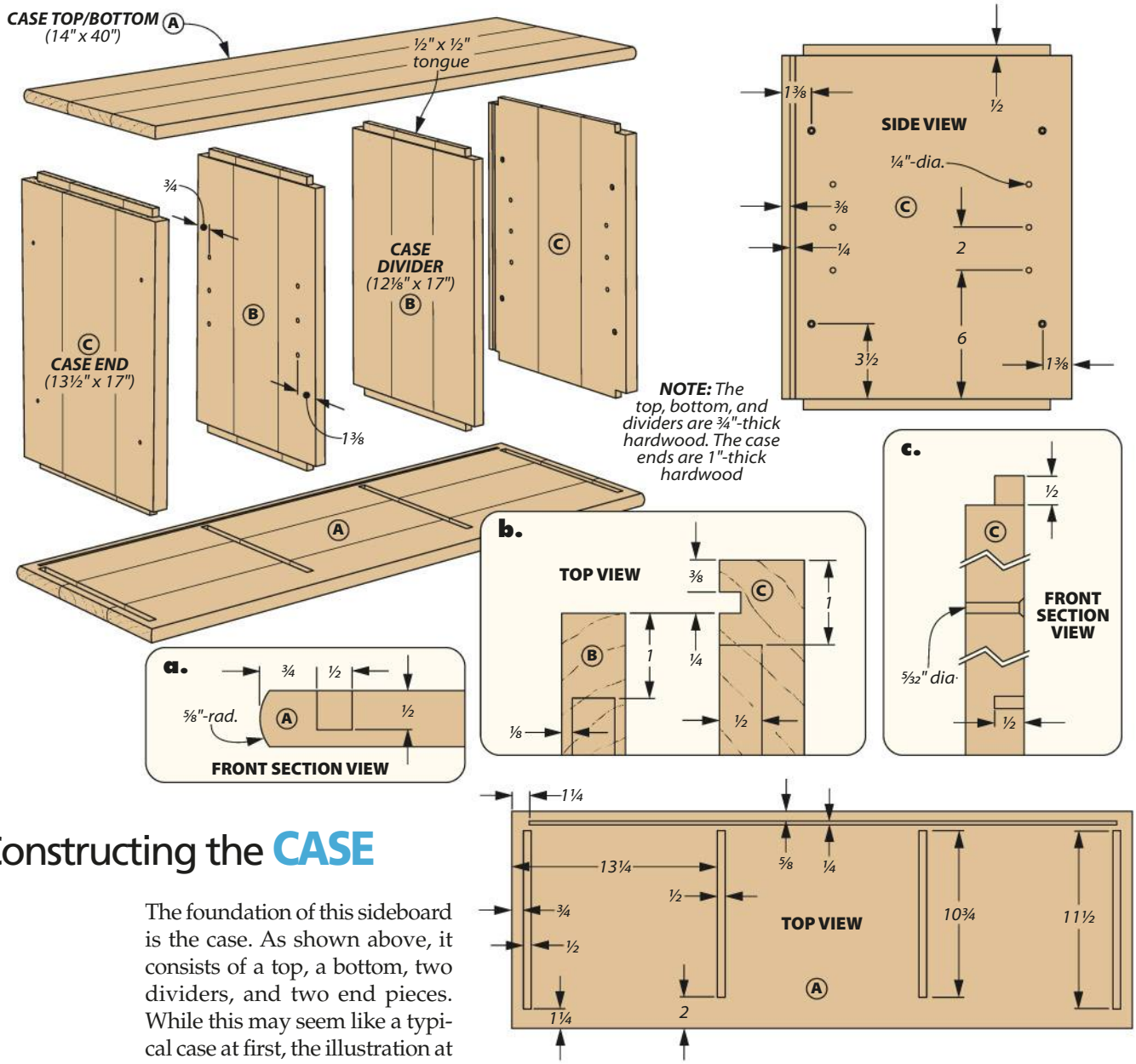

Constructing the CASE

The foundation of this sideboard is the case. As shown above, it consists of a top, a bottom, two dividers, and two end pieces. While this may seem like a typical case at first, the illustration at right shows a key difference: the tongues on the dividers and ends are buried in stopped grooves and dadoes.

TOP & BOTTOM. I almost always prefer to make the "mortise" side of a joint first, so I began with the top and bottom. Because of their width I glued together several boards to create some appealing panels, then cut them down to size.

Next came those stopped dadoes. My plunge router along with a straight bit was the best tool for the job here. The grooves for the back panel were easy enough: an edge guide kept the grooves parallel while stop blocks kept a consistent length. However, for the dadoes I ended up creating two jigs to to use with a guide bushing (one for the dividers and one for the ends). For more on making and using these, visit *Woodsmith.com/274*.

To finish up the top and bottom, take the pieces over to the router table. I used a bullnose bit to create the rounded edges around each piece (detail 'a').

DIVIDERS & ENDS. Next on the docket are the dividers and ends. After gluing them up and cutting them to size, I began creating the tongues by removing the corner waste with vertical cuts on each piece at the table saw, using a tall auxiliary fence on my miter gauge to support the workpieces. Next, I buried the blade in an auxiliary rip fence to rabbet the ends and create the tongues.

While at the table saw, I also cut the grooves for the back panel. Once those were in place, I finished up the case pieces by heading to the drill press and adding the shelf pin holes, as well as the countersunk pilot holes for the legs. Although

GO 2 Online Extras

For more on making the stopped dadoes and grooves go to:

Woodsmith.com/274

this completes most of the case, there's something else we need to get to before assembly.

CASE BACK ASSEMBLY

There's a lot going on with the back assembly. Luckily, it can be broken down to simple, frame-and-panel joinery with splines used to join it to the case.

RAILS & STILES. After sizing the rails and stiles, it's time to cut some grooves at the table saw. Details 'a,' 'b,' and 'c,' show the dimensions here; keep in mind that the end and central stiles are nearly identical, save that the center stiles have the added groove to accept the case dividers shown in detail 'a.'

To address the ends of these pieces, Figure 1 shows how to create grooves in the ends of the rails. As for the stiles, they'll need tongues to fit into the grooves.

PANELS. Now for the panels. After the glueup and sizing is done, it's time to rabbet their edges. Bury the dado blade in an auxiliary fence, then rabbet around the panels to create tongues to match the grooves in the rails and stiles.

ASSEMBLY. Begin the assembly by gluing up the back panel. Start by joining the rails and stiles around the panels. Then, cut the splines to size.

It's time to glue up the case. I recommend using a slow-setting glue and keeping a few squares nearby. Set the case bottom on your bench, then fit in the back assembly (splines included). Bring the case ends into place. Slip the tongues of the case dividers into their dadoes and the grooves in the center stiles, then bring the top in over everything else, clamping it all together.

GROOVES IN THE END

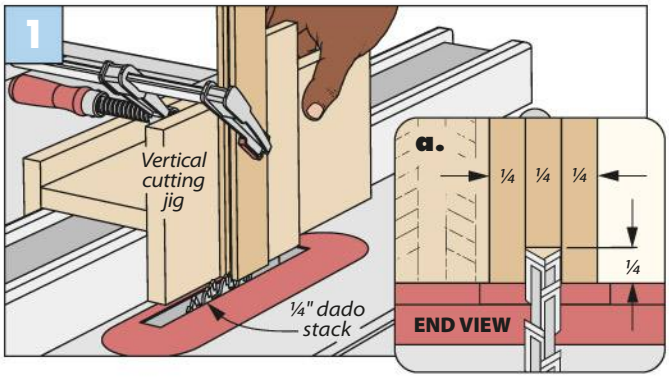

Vertical Cuts. The best way to cut the grooves in the ends of the back rails is at the table saw, using a vertical cutting jig. The jig supports the workpiece on two sides while a clamp keeps it firmly in place during the cut.

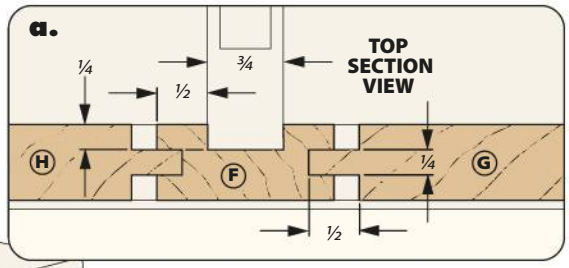

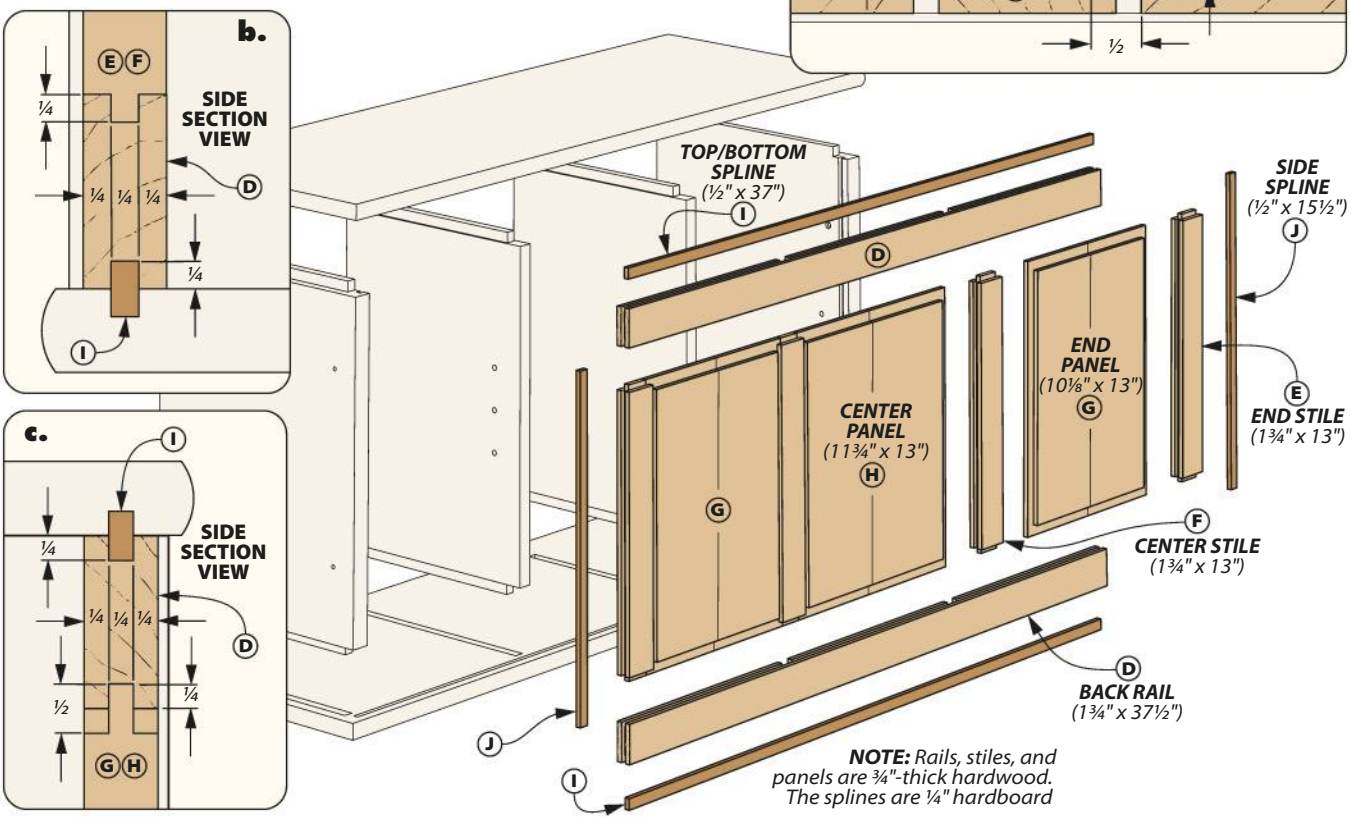

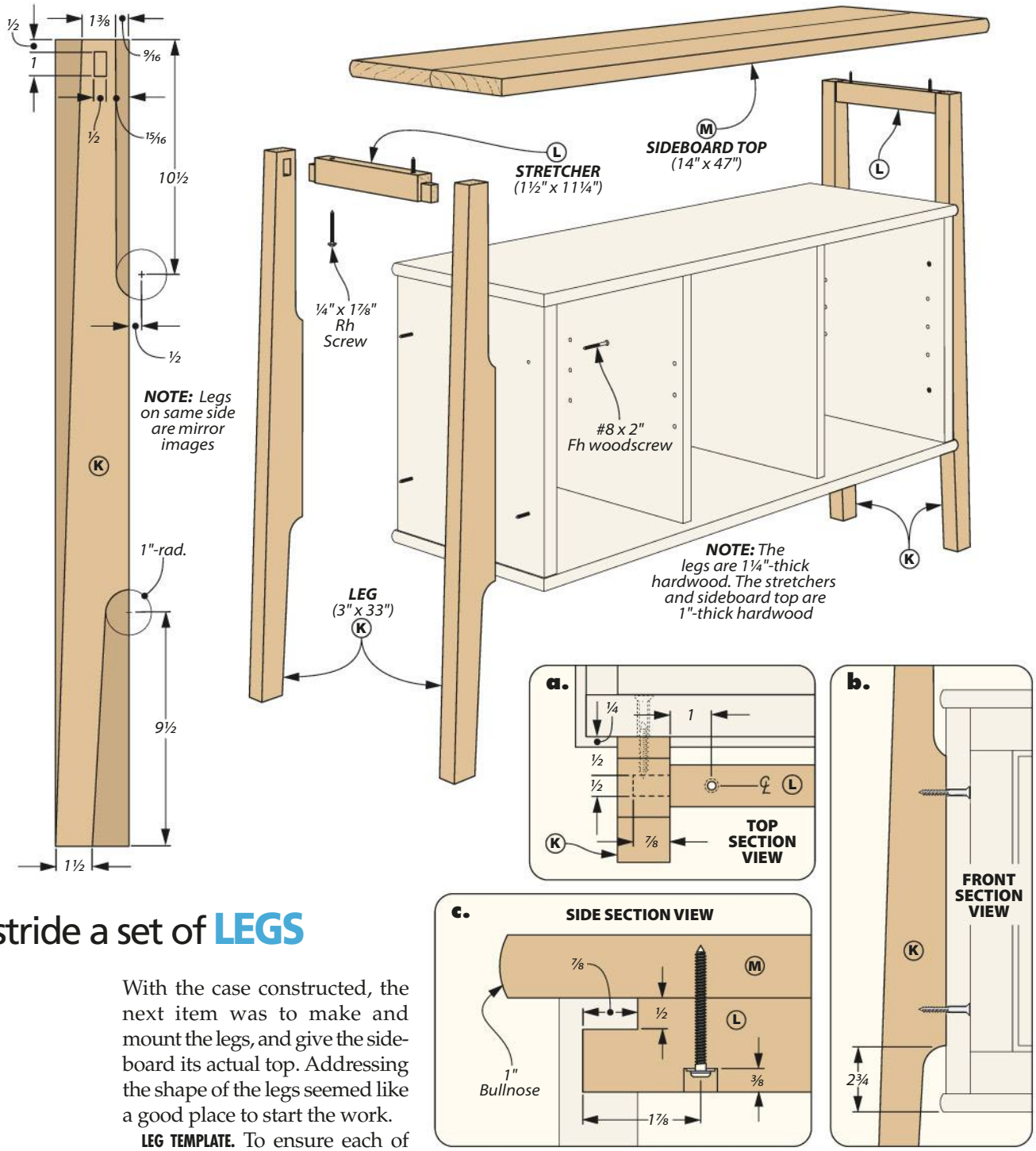

Astride a set of **LEGS**

With the case constructed, the next item was to make and mount the legs, and give the sideboard its actual top. Addressing the shape of the legs seemed like a good place to start the work.

LEG TEMPLATE. To ensure each of the legs would each be identical, I chose to make a template out of hardboard (using what I had leftover from the splines). The left illustration above shows the dimensions I used.

After laying out the shape of the template, I drilled out the waste for the radii using a large Forstner bit. Additionally, I drilled out the waste where the mortises would be. Doing this ensures that each mortise will be in the same position relative to the profile for every leg blank. From there I cut the rest of the waste free at the band saw, then used the spindle sander and edge sander to reach the final shape of the profile (filing the mortise clean as well).

SHAPING THE LEGS. With the template in hand, I could now start shaping the legs. After sticking the template down to one of the blanks with double-sided tape, I began with the mortises. I drilled out the majority of the waste with a Forstner bit, then cleaned up the sides and squared the corners with a chisel.

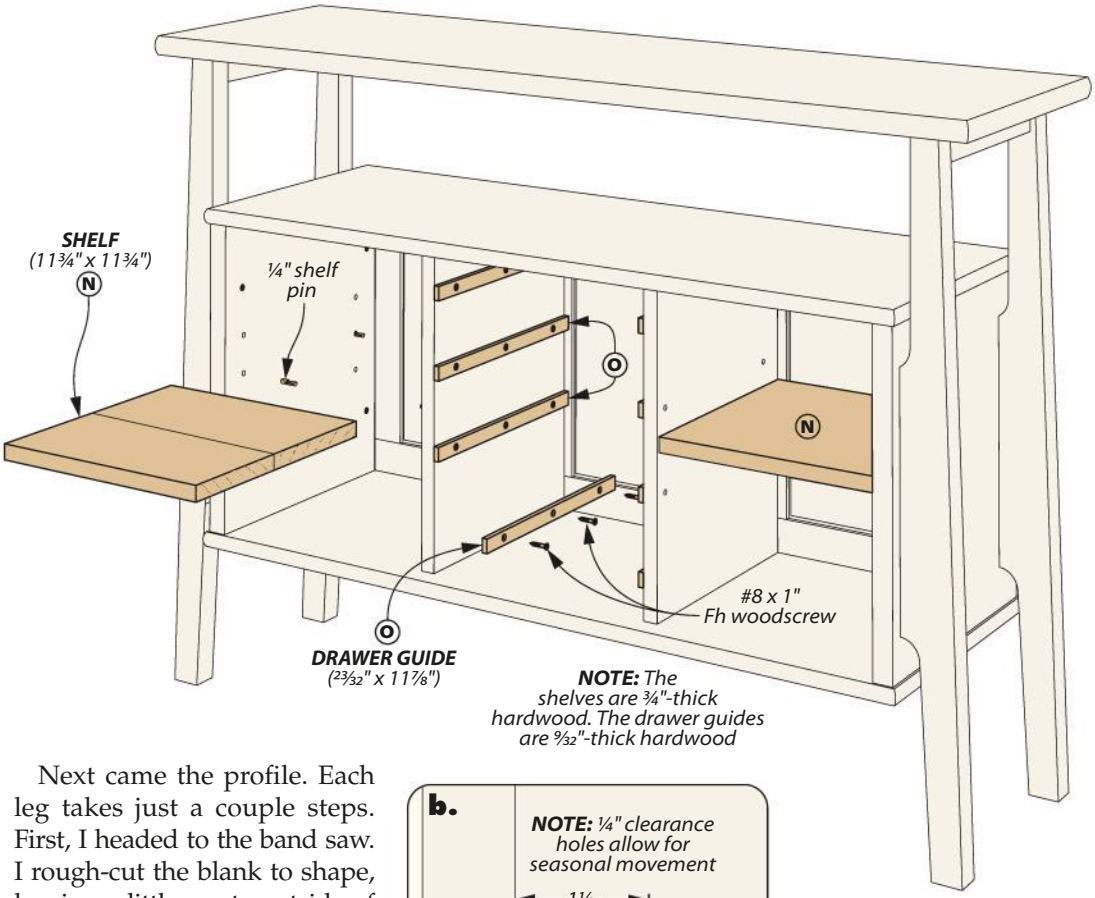

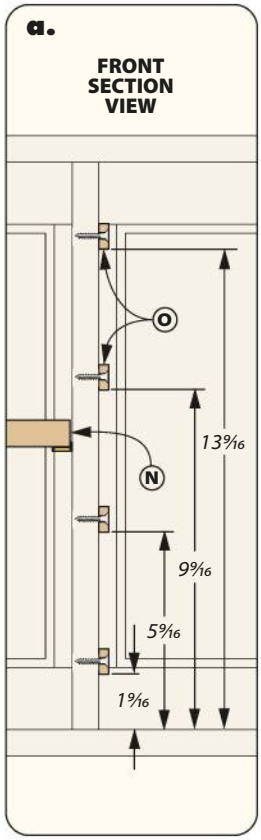

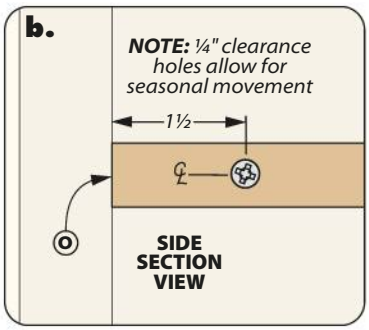

Next came the profile. Each leg takes just a couple steps. First, I headed to the band saw. I rough-cut the blank to shape, leaving a little waste outside of the template. After that, either a pattern bit in a handheld router or a flush-trim bit at the router table can be used to clean up the edges following along the template to achieve the final shape. Once you're happy with that leg, remove the template, scrape off the remaining tape, and repeat the process for the other legs.

STRETCHERS. With the legs made, we'll now want something to connect them at the top; that'd be the stretchers. After cutting them to size, take these pieces over to the drill press. As you can see in detail 'c' on the previous page, roundhead screws secure the top in place, so you'll need to drill counterbored clearance holes to accept these.

Next up are the tenons on the ends. I used a miter gauge at the table saw to create the tenons. These match the mortises in the legs. Keep in mind that only three sides of these tenons will have shoulders.

SIDEBOARD TOP. Finally, we can get to the top. After selecting the best boards for your sideboard, glue them up and cut the top to size. To create the bullnose edges shown in detail 'c,' (previous page) I used a bullnose bit at the router table, as I did with the case top and bottom.

ADDING THESE PIECES. To put this all together, I started out by gluing up the leg and stretcher assemblies. Once dry, I glued and screwed each assembly to the case (detail 'b,' previous page). With those attached, I flipped the project up and clamped the top centered onto the stretchers. To mount the top, I drilled pilot holes into the it and secured it with roundhead screws.

SHELVES & GUIDES

The drawers and doors will really fill out this sideboard, but there are two sets of parts to address before we get there.

SHELVES. A pair of shelves fit in the compartments of the sideboard. These are simple, hardwood squares held up by shelf pins. After sizing the shelves, you can insert the pins and set the shelves in place.

DRAWER GUIDES. Last come the hardwood drawer guides. After planing them down and sizing them so they'll sit flush with the fronts of the case dividers, the clearance holes were the main thing to take care of (detail 'b). I made these at the drill press, using the fence and stops to ensure consistency.

Details 'a' and 'b' above show the location of the drawer guides. Once you've screwed the guides in, you're ready to move on to the drawers and doors.

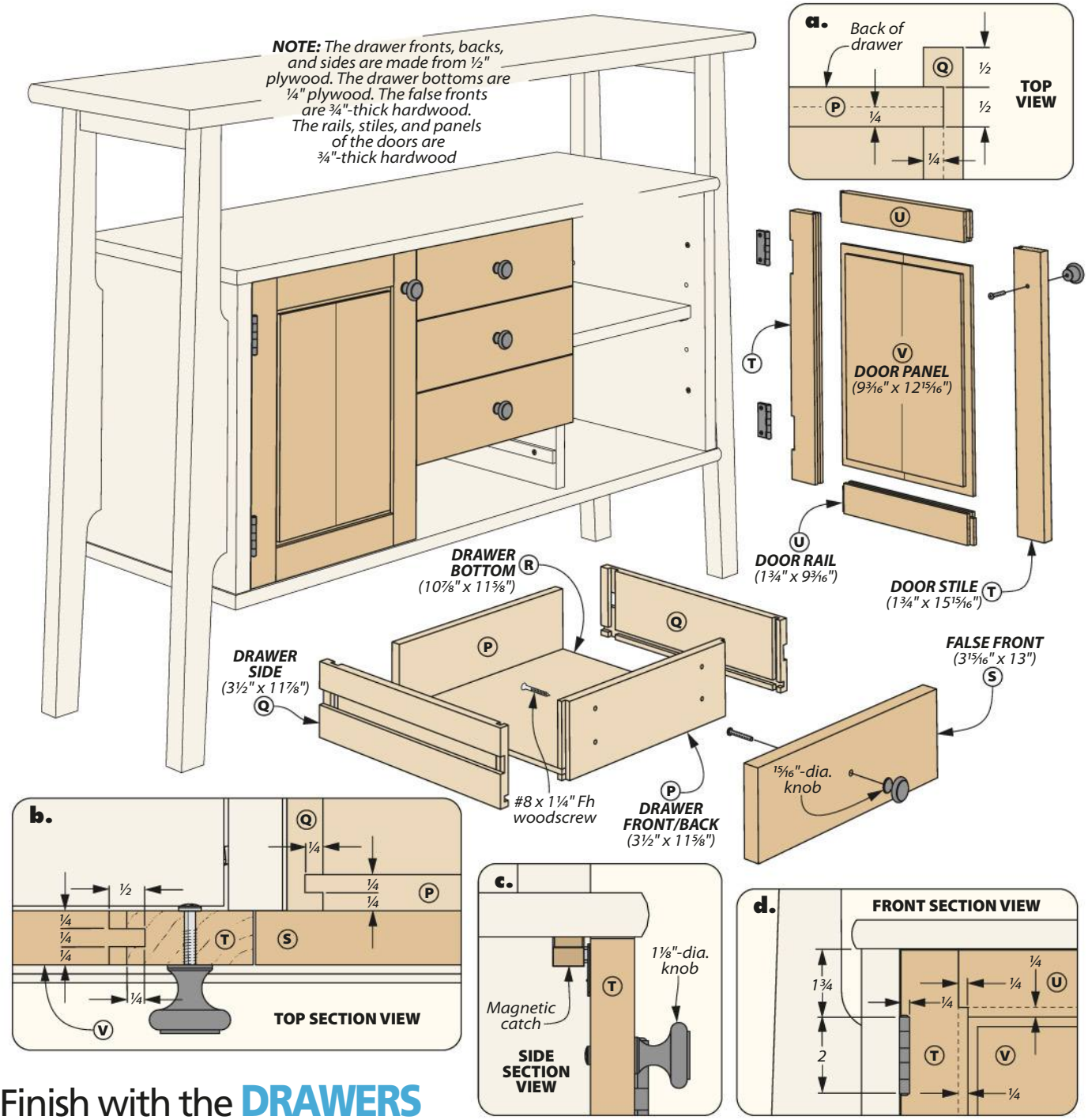

Finish with the DRAWERS

A pair of doors and a quartet of drawers finish up this project. Although it doesn't matter which ones you tackle first, I went with the drawers.

DRAWER JOINERY. While the false fronts are alder like the rest of the sideboard, I made the drawer parts themselves from reliable Baltic birch plywood.

After cutting the fronts, backs, and sides all to size, you can set the backs aside for the time being. All the drawer joinery takes place at the table saw. I started out with my miter gauge, using a dado blade to cut the dadoes in the side pieces. The front dadoes will accept a tongue (detail 'b'), but the back ones are sized for the back pieces (detail 'a'). Be sure to size your dado stack precisely to the thickness of your plywood pieces.

Once those are done, attach an auxiliary rip fence and bury the dado blade. Rabbet both ends of the front pieces to create tongues matching their dadoes.

After the drawer joints fit together nicely, set your table saw up to cut the grooves for the bottom panels (Figure 1, next page). Then, cut the wide grooves in the sides to accept the drawer guides (Figure 2).

DRAWER JOINTS & GUIDE SLOTS

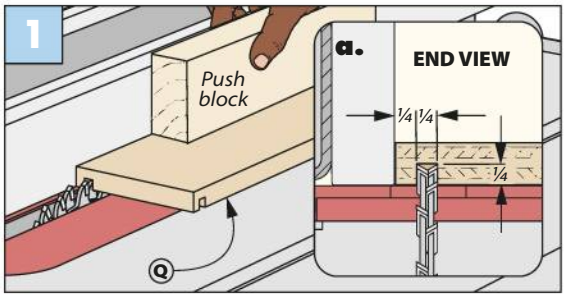

Bottom Grooves. Use a dado blade and push block to cut the grooves to accept the bottom panel.

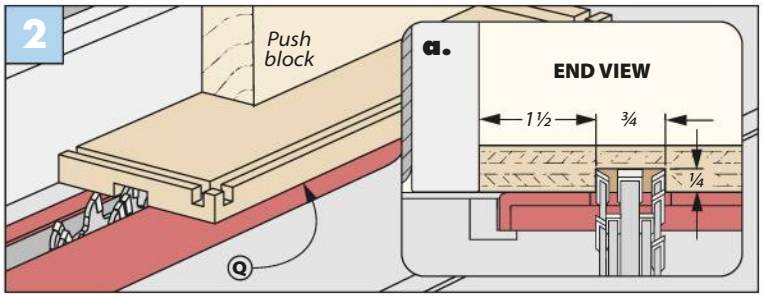

Guide Slots. Slots in the drawer sides allow them to run along the guides. Size these 1/32" wider than the drawer guides themselves.

These are slightly wider than the guides for smooth movement.

ASSEMBLY. To bring these drawers together, cut the bottom panels to size and glue up each drawer. Next, cut the false fronts to size. Once the clamps come off, screw them onto the drawer fronts to the boxes with their bottoms flush. Lastly, attach the knobs. Drill out their clearance holes, then thread them in place.

A PAIR OF DOORS

Finally come a pair of doors to close off the cabinets. There's a bit of simple panel-and-frame joinery here — a great way to finish up this project.

DOOR JOINERY. Rails, stiles, and panels make up the two doors. After cutting the pieces to size, the story is similar to the back panel: cutting the grooves and rabbeting the tongues. Take note that one stile on each door has mortises for the hinges; this is a good time to cut them.

FINAL TOUCHES. With the joinery all made, glue up the doors. Once dry, hang the doors and do any final sizing needed with a block plane, aiming for a 1/16" reveal all around. Add the knobs and catches, then take some time to choose where this beautiful, new piece belongs. W

Materials, Supplies & Cutting Diagram

A	Case Top/Bottom (2)	¾ x 14 - 40
B	Case Dividers (2)	¾ x 12⅛ - 17
C	Case Ends (2)	1 x 13½ - 17
D	Back Rails (2)	¾ x 1¾ - 37½
E	End Stiles (2)	¾ x 1¾ - 13
F	Center Stiles (2)	¾ x 1¾ - 13
G	End Panels (2)	¾ x 10⅛ - 13
H	Central Panel (1)	¾ x 11¾ - 13
I	Top/Bottom Splines (2)	¼ hdbd. - ½ x 37
J	Side Splines (2)	¼ hdbd. - ½ x 15½
K	Legs (4)	1¼ x 3 - 33
L	Stretchers (2)	1 x 1½ - 11¼
M	Sideboard Top (1)	1 x 14 - 47
N	Shelves (2)	¾ x 11¾ - 11¾
O	Drawer Guides (8)	9/32 x 23/32 - 11⅞
P	Drwr. Fronts/Backs (8)	½ ply. - 3½ x 11⅝
Q	Drawer Sides (8)	½ ply. - 3½ x 11⅞
R	Drawer Bottoms (4)	¼ ply. - 10⅞ x 11⅝
S	False Fronts (4)	¾ x 3 15/16 - 13
T	Door Stiles (4)	¾ x 1¾ - 15 15/16
U	Door Rails (4)	¾ x 1¾ - 9 3/16
V	Door Panels (2)	¾ x 9 3/16 - 12 15/16

- (8) #8 x 2" Fh Woodscrews
- (4) ¼"-20 x 2¼" Rh screws
- (24) #8 x 1" Fh Woodscrews
- (8) ¼" Shelf pins
- (4) 15/16"-dia. Forged iron knobs
- (2 pr.) 2" Solid brass butt hinges
- (2) 1⅛"-dia. Forged iron knobs
- (2) 1⅛" Narrow profile magnetic catches

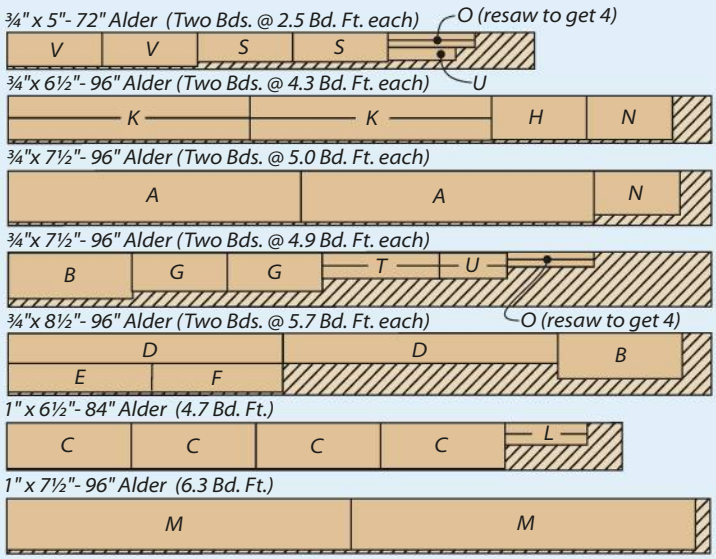

ALSO NEEDED: *One 24" x 36" sheet of ½" Baltic birch plywood, one 24" x 48" sheet of ¼"-thick hardboard, and one 24" x 24" sheet of ¼" Baltic birch plywood*

EVERYTHING
for the Woodshop

grizzly.com®

800-523-4777 #GRIZZLYTOOLS

affirm Monthly Payments
clicklease Business to Business Equipment Financing
FINANCING AVAILABLE

Please visit grizzly.com for up-to-date pricing.

Due to rapidly changing market conditions, our advertised prices may be changed at any time without prior notice.

WARNING! †[1] : Cancer & Reproductive Harm

Some products we sell can expose you to chemicals known to the State of California to cause cancer and/or birth defects or other reproductive harm. For more information go to www.P65Warnings.ca.gov

23210

Purveyors of Fine Machinery® Since 1983

Grizzly Industrial®

Quality Machines, Buy Direct & Save

10" 2 HP 115V/230V Cabinet Saw

Power, precision, and durability

- 31½" Rip capacity
- Blade guard dust collection
- 40" Cast-iron table
- Cast-iron tables and trunnions
- Deluxe 2-position aluminum rip fence
- Footprint: 27" x 20½"
- Shipping weight: ≈ 473 lbs.

MADE IN AN ISO 9001 FACTORY

G0899 ONLY $1395 — $249 FREIGHT

10" 3 HP 240V Table Saw

High-end functionality

- Built-in cast-iron router table extension
- Universal T-track router clamping system
- Table size: 48" x 27"
- Quick-change riving knife and blade guard
- Extra-large handwheels ease arbor movement
- Footprint: 20½" x 20½"
- Shipping weight: ≈ 550 lbs.

MADE IN AN ISO 9001 FACTORY

G1023RLW ONLY $2650 — $329 FREIGHT

10" 3 HP Heavy-Duty Cabinet Table Saw

For large-scale production

- Right and rear extension tables
- Digital readout for bevel angle
- Rip capacity: 52" R, 18" L
- Quick-change riving knife and blade guard
- Lockable magnetic switch
- Footprint: 22⅞" x 21"
- Shipping weight: ≈ 685 lbs.

MADE IN AN ISO 9001 FACTORY

G0651 ONLY $2595 — $369 FREIGHT

6" Jointer

A smooth-cutting spiral cutterhead

- 4-Row helical cutterhead with 30 indexable carbide inserts
- Parallelogram table adjustment
- Long infeed table and center-mounted fence
- Built-in mobile base
- User-friendly controls
- Footprint: 27" x 20½"
- Shipping weight: ≈ 473 lbs.

G0604Z ONLY $1295 — $199 FREIGHT

15" Variable-Speed Planer

Engineered for power and precision

- 4-Row helical cutterhead with 52 indexable carbide inserts
- Digital table height readout
- Variable-feed speed dial on control pedestal
- Precision-ground cast-iron table
- Extra-large ball bearing return rollers
- Footprint: 23" x 22½"
- Shipping weight: ≈ 595 lbs.

MADE IN AN ISO 9001 FACTORY

SB1108 ONLY $2995 — $329 FREIGHT

17" Bandsaw

Our best-selling 2 HP bandsaw

- Left-cutting capacity: 16¼"
- Resaw capacity: 12"
- Blade speeds: 1700, 3500 FPM
- Oversized cast-iron table
- Table tilt: 5° Left to 45° right
- Footprint: 27" x 18"
- Shipping weight: ≈ 421 lbs.

MADE IN AN ISO 9001 FACTORY

G0513X2 ONLY $1995 — $249 FREIGHT

18" x 47" Heavy-Duty Wood Lathe

Digital control at your fingertips

- Variable frequency drive
- Variable-speed spindle control
- 10° Spindle indexing
- Digital readout
- Cast-iron construction
- Footprint: 65½" x 20"
- Shipping weight: ≈ 503 lbs.

MADE IN AN ISO 9001 FACTORY

G0733 ONLY $2325 — $329 FREIGHT

6" x 48" Belt/9" Disc Combo Sander

Designed for heavy-duty projects

- Cabinet stand with convenient storage locker
- Exclusive quick belt-release mechanism
- Cast-iron table, disc, and body
- Graphite-coated platen
- Dual dust ports
- Footprint: 15" x 16½"
- Shipping weight: ≈ 173 lbs.

MADE IN AN ISO 9001 FACTORY

G1014ZX ONLY $595 — $199 FREIGHT

3 HP Double Canister Dust Collector

The ultimate in dust collection

- 1-Micron, double-canister filtration
- Collection capacity: 9 Cubic feet
- 3-Inlet 4" adapter
- Heavy-duty steel intake
- Airflow capacity: 2320 CFM
- Footprint: 49½" x 21½"
- Shipping weight: ≈ 214 lbs.

MADE IN AN ISO 9001 FACTORY

G0562ZP ONLY $1125 — $199 FREIGHT

Written by: Erich Lage; Project Design: Chris Fitch

Round-Top Bookcase

Here's a project that goes way beyond a box with shelves. This elegant piece is a perfect showcase for the words, moments, and curios that you treasure.

Building a basic bookcase is one of the quickest projects you can do in your shop. It's a box with a back, and shelves that are built in or adjustable. Bam! Out the door the bookcase goes to its new role in the world of decorative storage furniture.

Then there's the cherry bookcase you see here. Structurally it starts out the same way, but then what lifts and tops the bookcase you see in the photos below, are game-changers.

THE BASE. The four good-looking legs that raise this project off the floor are scaled properly to remove any notion of spindly support. They also sing subtle praise for the kindred curves in the arch at the top of the bookcase. There's fun to be had at the band saw making the legs.

THE TOP. The barrel vault that is underneath the top is the pinnacle of classic Roman architecture. To make the barrel involves an alliance of a product called *Bendy* plywood that's shaped with a shop-made form, and coated with thickened epoxy. Once the vault is glued to the case, it's draped with a unifying cherry veneer and a face frame.

A fair amount of work indeed, but for me the reward is in the effort and results of such a project. Let's head to the shop.

▲ The seamless transition between the case and the crown of the bookcase is brought to you by a unique product called "bendy" plywood that lives underneath the veneer.

▲ Handsome feet lift the bookcase off the floor and provide a stately air to the look of the piece. Full-extension drawer slides give you full access to a generously sized drawer.

Illustrations: Dirk Ver Steeg

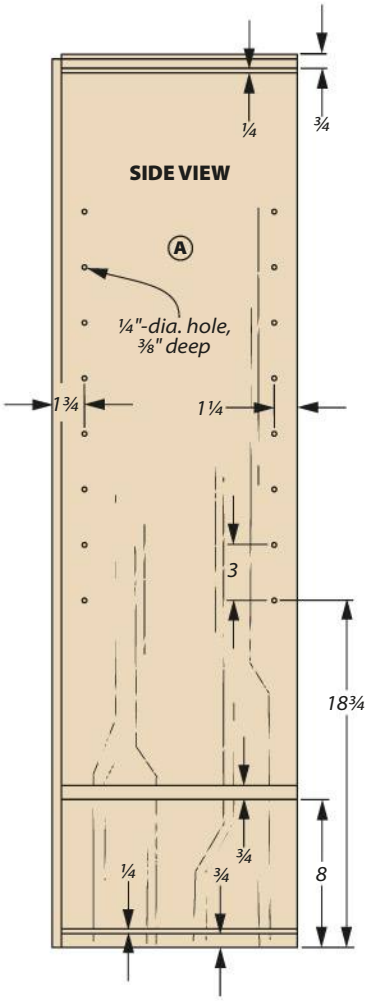

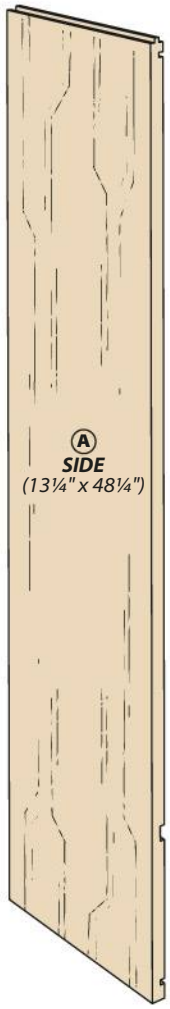

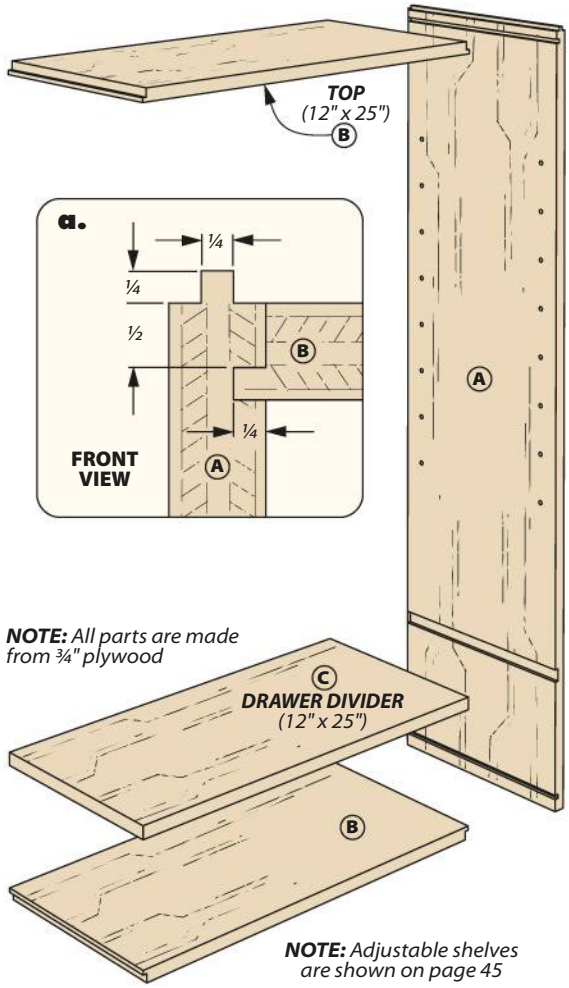

At the core is a **SOLID CASE**

The shell of this bookcase is identical to the example I described in the introduction of this project — it's a box with shelves. But there's a little more to it; let's review the details.

There's joinery on the inside face of the sides to accommodate the top and bottom, along with a divider that defines a space for a drawer, and a rabbet for the plywood back. Also, you've got an array of shelf pin holes for the adjustable shelves you'll add later. Then there's the matter of a tongue on the top edge to mate with a groove in the barrel vault.

SIDES FIRST. To start, cut the case sides to their final size. Then it's time to cut the three dadoes on the inside faces for the horizontal members we just talked about. The side view drawing above shows all three dadoes. After cutting the narrow dadoes for the top and bottom, change out the dado stack to cut the wider dado for the drawer divider. Detail 'c' shows what this looks like on the lower portion of the case. Follow this up with burying the blade in an auxiliary rip fence to make the rabbet along the back edge of the sides (detail 'b'). As for the shelf pin holes, I made a hardboard story stick that lines up

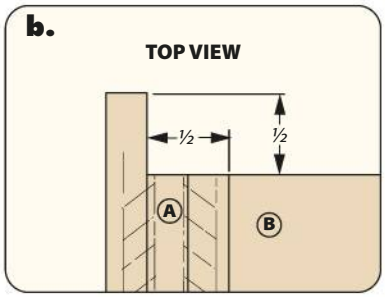

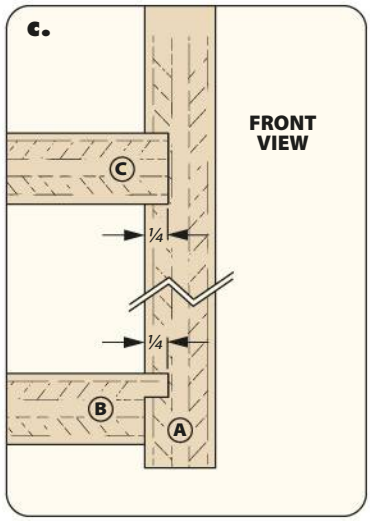

with the top of the dado for the drawer divider. When drilling the holes along the rear edge, the story stick aligns flush with the rabbet for the back.

MAKE A TONGUE. To cut the tongue along the top edge that will join with the groove in the barrel vault (Figure 2a), you're going to need some support on the outboard end. Or, you can cut the tongue with a hand-held router and a rabbeting bit. If you choose to do the latter, protect the outfeed end from chipout by clamping a sacrificial scrap to the edge of the side.

TOP, BOTTOM & DIVIDER. The three horizontal members are initially cut to the same size. Doing that task completes the drawer divider, now you need to make the tongues on the top and bottom. As you see in detail 'c' and the main drawing on the previous page the tongues are the same size, just flipped in orientation. To make the tongue, dress up your table saw the same way you did to make the rabbet in the back.

GLUE-UP & EDGING. One thing to remember when gluing up the case — hold the horizontal members flush to the rabbet at the back of the sides. It's a good idea to use clamping squares to ensure the case is square.

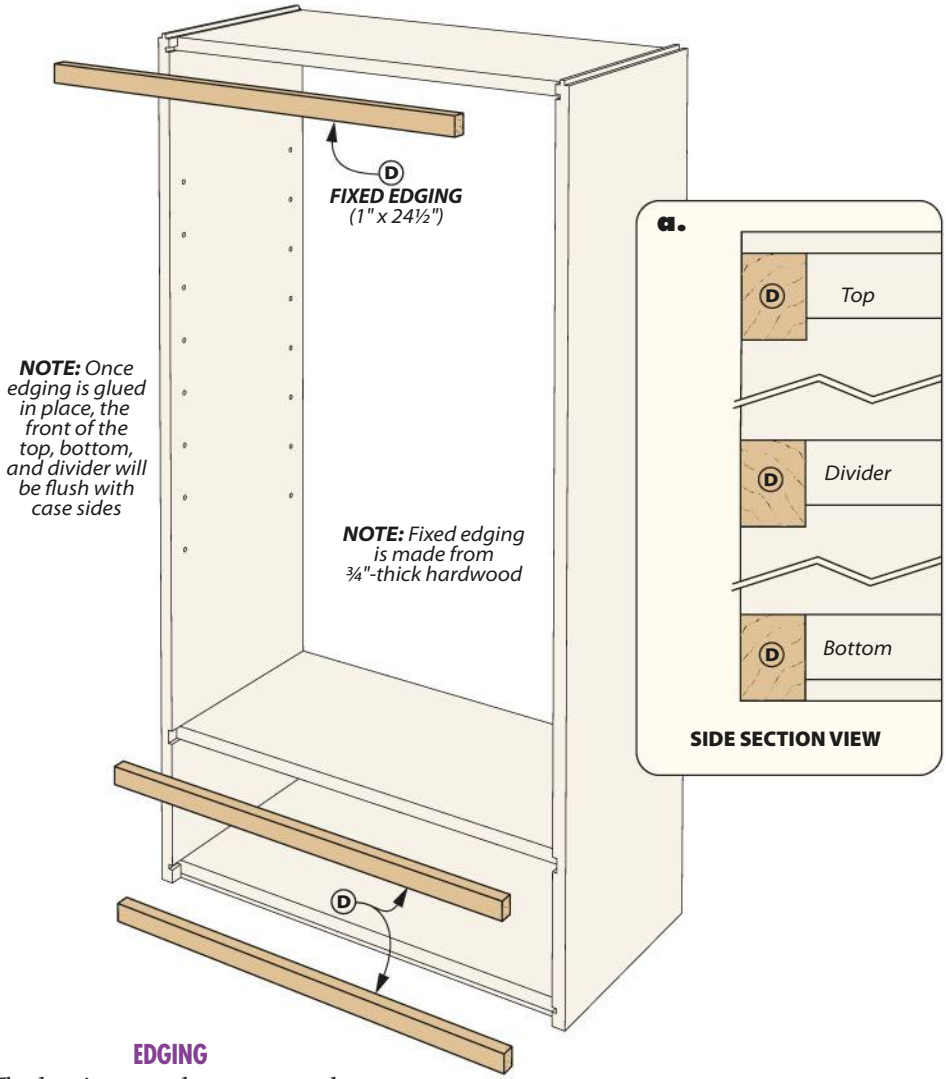

EDGING

The last item on the case agenda is to fit and glue the edging on the top, bottom, and drawer divider. This is easy to do since the back of the case is open. As you see in detail 'a,' each edging piece is flush to top of the panel it's glued to. Later, when the face frame is installed on top, it makes for interesting shadow lines across the case.

CASE SIDE JOINERY

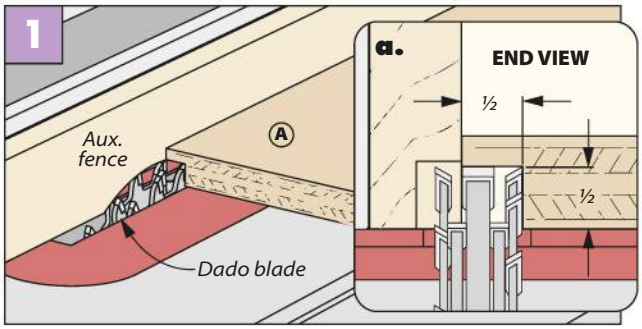

A Long Groove. A dado blade and an auxiliary fence make quick work of the groove needed in the sides.

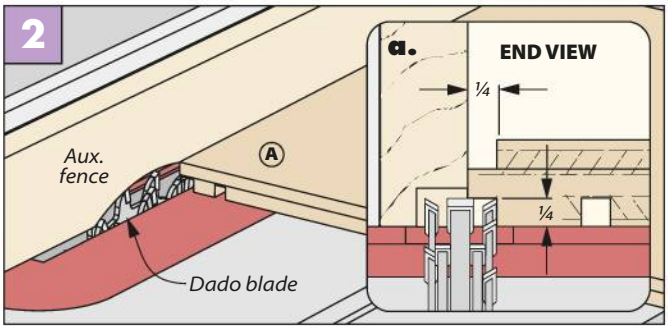

A Tongue on Top. Lower the blade and adjust the fence to cut the tongue along the top edge of the sides.

Crown the case with a **BARREL VAULT**

Barrel vaults are designed to distribute weight from above down the sides to the ground. A by-product of that engineering happens to be that the vaults look good while doing their thing. And that's what is mainly at play with this bookcase — making a handsome top.

UNIQUE PLYWOOD. The easiest way to make the curved barrel is to use a material called "bendy" plywood. You'll coat two sheets of ⅜" plywood with thickened epoxy and clamp them to the form you see in the box below. There are detailed instructions about making the form, and using it to shape the barrel vault online at *Woodsmith.com/274*.

The critical part I will mention here deals with the trim line you need to mark on the barrel vault while it's clamped to the form. Figure 2 in the box below shows what I'm talking about.

TRIM TO SIZE. When the barrel comes off the forms, it's time to prepare it for joining to the tongues you made in the case sides. This involves trimming the barrel to final size and adding grooves to join with the case. Also you'll need to rout a rabbet for back. Start by squaring the edges

SNEAK UP ON SQUARE. To start the process I used a track saw to cut close to trim line on both edges. Then it was time for a trip to the jointer to true the edges and sneak up on the trim line. Although the barrel is already quite rigid from the epoxy, it's

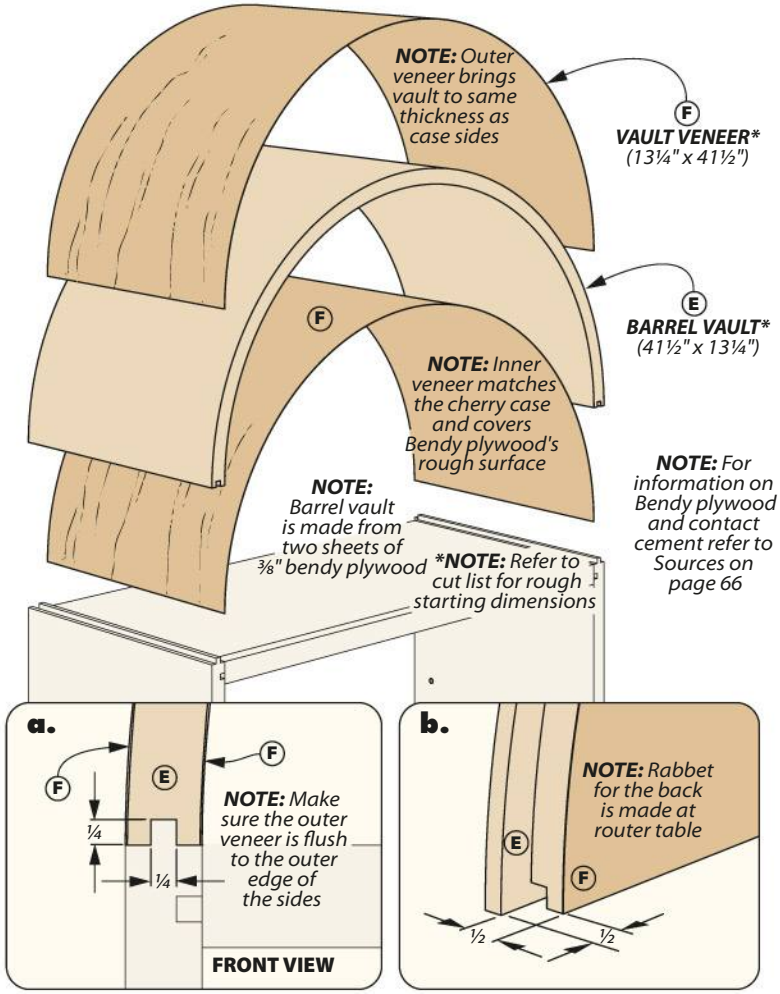

GO 2 Online Extras

For more on making barrel vaults, veneering, and curved edging go to:

Woodsmith.com/274

BENDING FORM

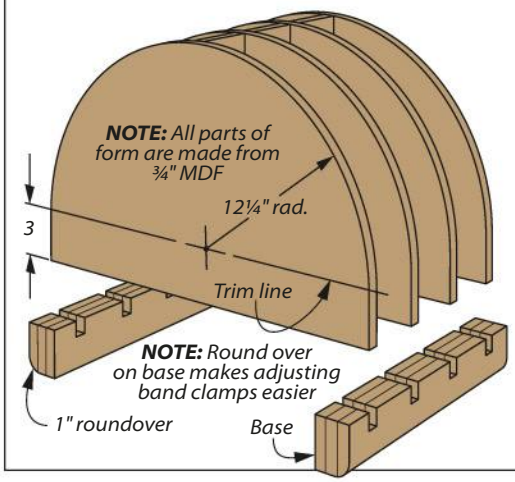

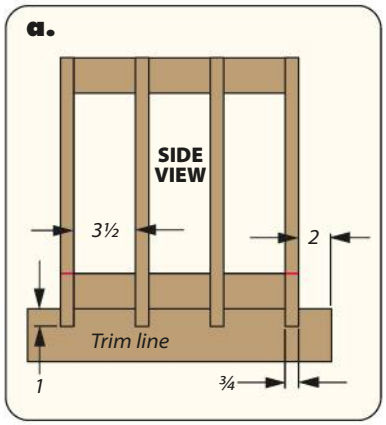

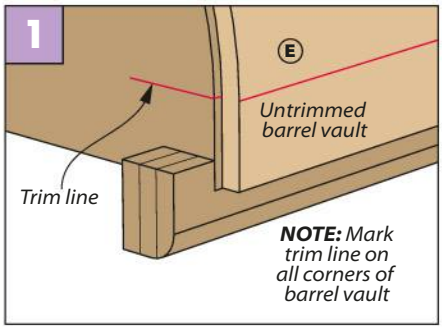

The Trim Line. Before removing the barrel from the form you need to mark the trim line location on all sides.

a good idea to screw a spacer between the ends of the barrel to minimize movement while dialing in the edges.

VENEER. The thickness of the barrel vault needs to be close to that of the plywood sides it's joining. The easiest way to do this is to line the barrel vault with veneer like you see in the main drawing on the previous page. When the veneer is in place, carefully trim it flush with your router.

JOINERY DETAILS. Next is cutting the grooves in the edges of the barrel (detail 'a,' previous page). I made a sled for the barrel to rest on as it's fed through the table saw blade. Next is routing the rabbet for the back along the rear edge of the barrel (detail 'b,' previous page).

GLUE BARREL TO CASE. It's time to mix another batch of thickened epoxy to bond the barrel to the case. This epoxy will work as a filler in any voids around the seams. No clamps were needed here, just tape (and gravity).

THE BACK. First, rip the back to width at the table saw. Then place it in the opening and trace the contour of the arch and cut it out with a jig saw and pin nail it in place.

MORE VENEER. Now it's time for the big match — veneering the case. The best way to win the battle against this long, floppy, piece of veneer is to not fight it. To do that you'll lay the case on its back lifted off the floor with blocking. Then you can apply the contact cement to both surfaces. When the surfaces are dry, stand the veneer on edge. With the help of a trusted friend or two, press the veneer place. After it's trimmed flush it's time to install the face frame.

THE FACE FRAME

To start the face frame, the two long pieces of edging are cut to size then glued and clamped to the case. There are three segments that make up the arched face frame on the barrel vault. They're mitered to length at the table saw.

GLUE UP SEGMENTS. Apply tape to the back side of the segments, add glue to the joints and let them dry on a flat surface. Then clamp the segments to the case and trace the outer profile on the back side. For a clever way to scribe the inside of the segments, go to *Woodsmith.com/274*. Then you can glue the shaped segments to the case.

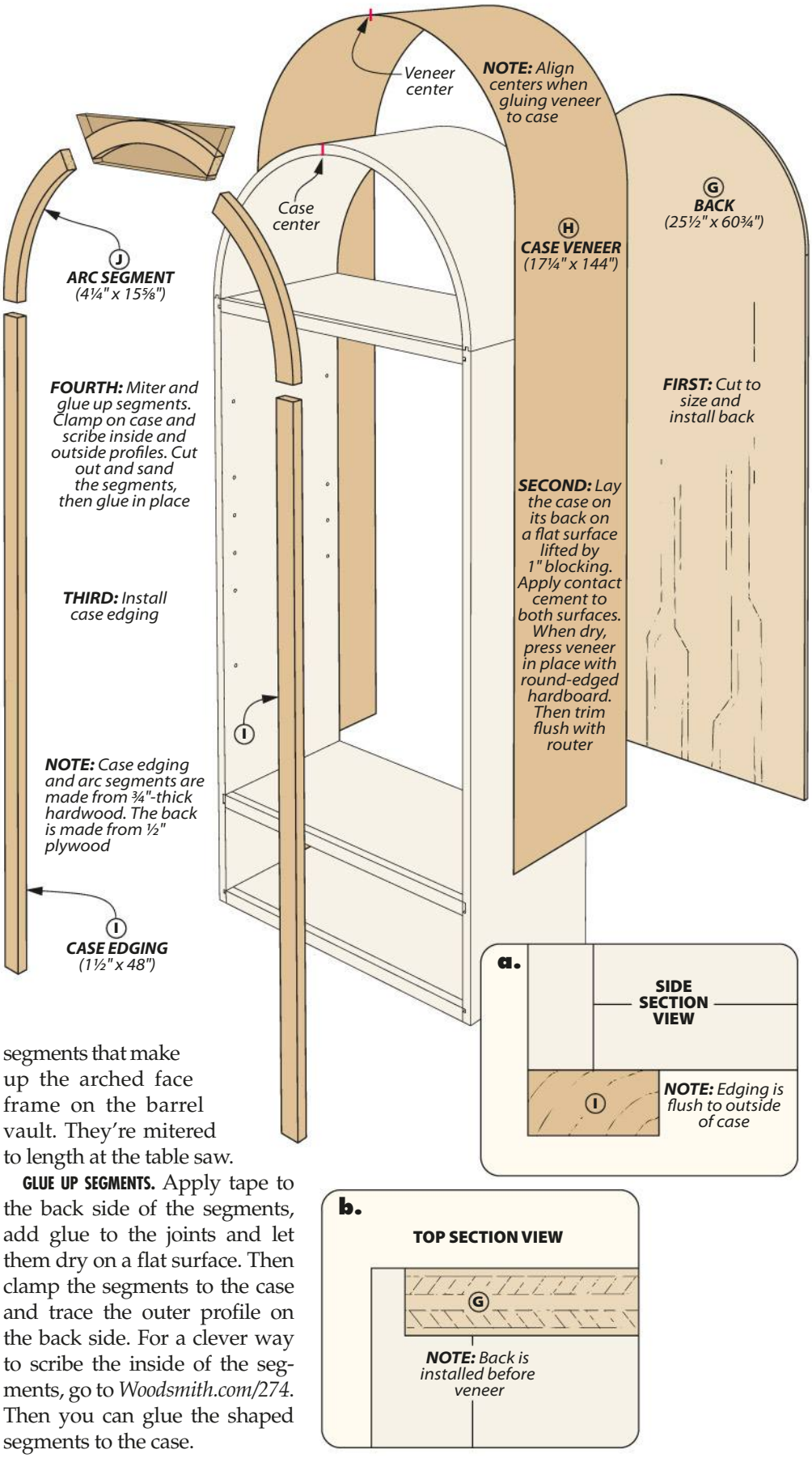

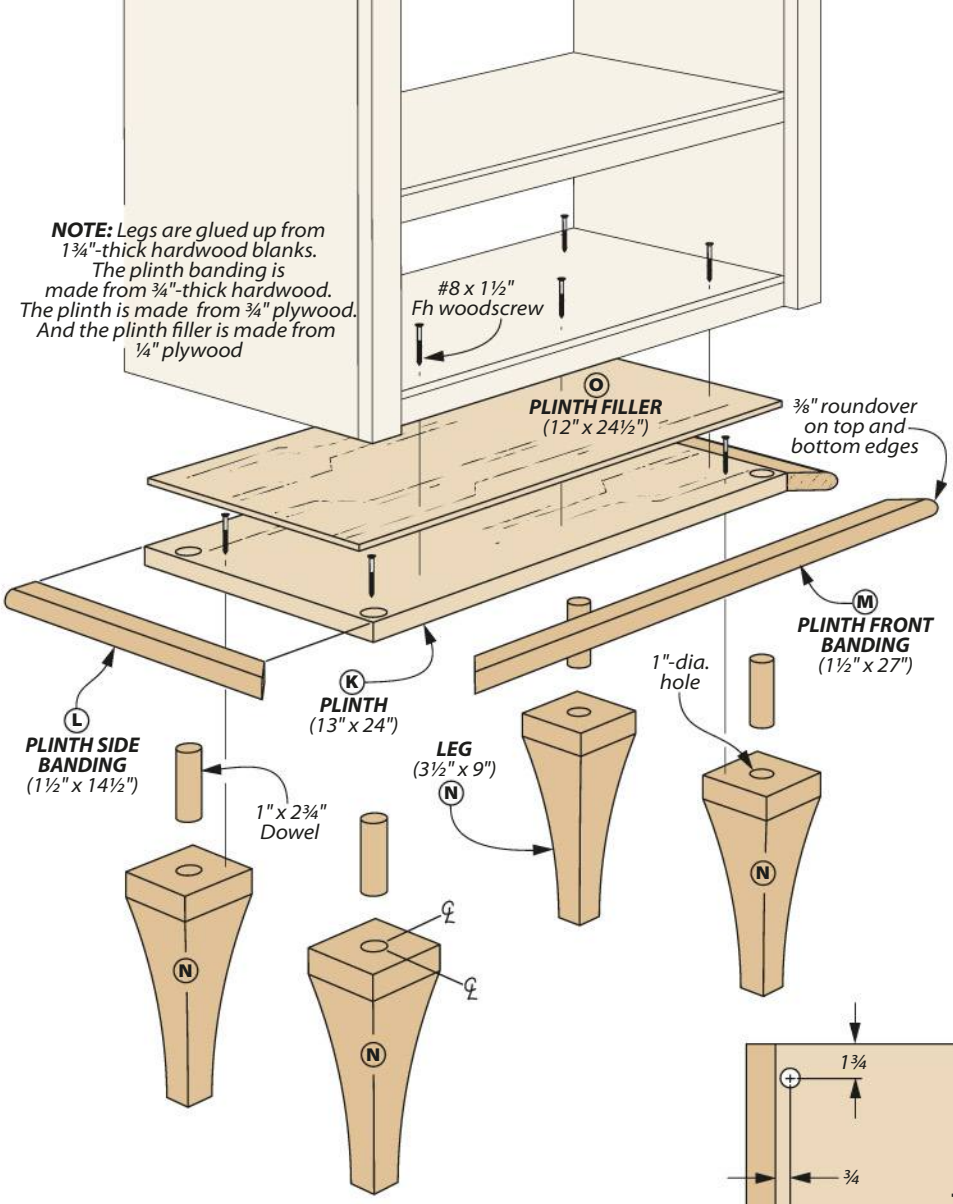

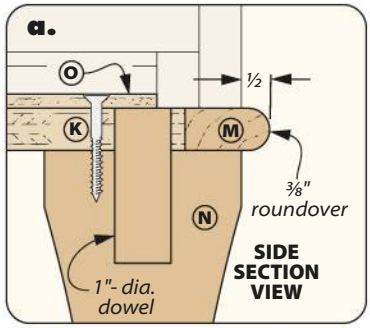

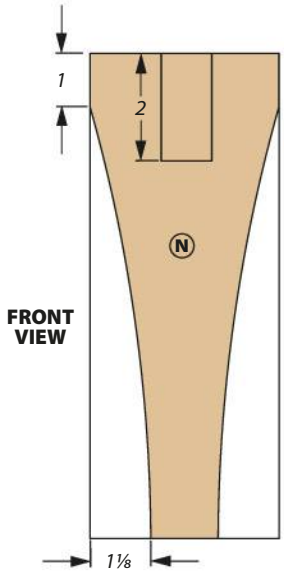

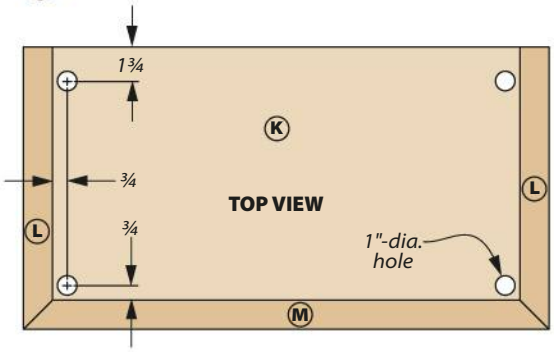

Next comes a **BEAUTIFUL BASE**

Now we'll dress up the bottom of the bookcase with the base assembly you see in the drawings above. Since the legs are the center of attention, let's look at them first. The legs have a large surface at the top that makes a stable connection to one of the plywood plinths via a hardwood dowel. The tapered curves lighten the visual load as they meet the floor.

There are two plinths you'll need to make. The one I just mentioned is the thicker of the two and is banded with hardwood. The other is a thinner piece that fills the void between the plinth and the case. All of this information is shown in detail 'a.' To start this phase of the project, we'll make the banded plinth.

PLINTH & BANDING. First, the plywood core of the main plinth needs to be cut to size. Also, you can rip the banding to width — clearly two tasks for your table saw. The next step is to merge the parts you just made into the finished plinth. As you see in the drawings above, the banding has a generously sized roundover on its edge. I chose to rout the blanks first, to avoid the risk of chipping out the miters when fitting them to the plinth.

FIELD FIT. Instead of measuring the sides of the plinth for the miter cuts, It's best to field fit each piece — starting with one of the sides. Hold it flush to the back edge and mark the front corner for the miter cut. After the cut is made, dry clamp it in place and cut the adjacent miter on the front banding. In turn, hold the front banding against the miter and mark the location

of the miter on the other end and make that cut. On the last side, cut the miter first and fit it to the clamped front banding's miter while marking the square cut at the back of the plinth.

Glue on the banding one piece at a time, ensuring each piece is flush to the top edge and parallel to the plinth surface. Then it's time to drill the holes for the dowels. The Top View on the previous page shows where they're located.

THE LEGS

You can find sources online that provide large blanks that could be used for the legs. We chose to glue up 8/4 blanks instead. As for making the legs, the box to the right covers most of the information needed — here we'll visit about some of the details.

As you see in Figure 1, a Forstner bit is used to make the hole for the dowel. Forstner bits are perfect for making a flat-bottomed hole.

Tracing the profile on the blank is next up (Figure 2). There's a pattern online at *Woodsmith.com/274* that you can use for a template. Keep in mind you'll want to orient the glue lines to the sides of the bookcase. Then it's time to make the first cuts as you see in Figure 3.

To safely make the cuts on the opposite faces you'll need to tape the cutoffs back on the legs (Figure 4). Then you can sand all the surfaces smooth. Finally, cut dowels to length and glue them into the holes on the legs. Then glue and screw the legs to the holes in the plinth.

JOIN THE BASE & CASE. To join the base to the case it's just a matter of gluing the plinth filler to the underside of the case. (The case and base are flush at the back, and centered side to side.) Also, they are screwed together from inside the drawer cavity and the underside of the plinth.

MAKING THE LEGS

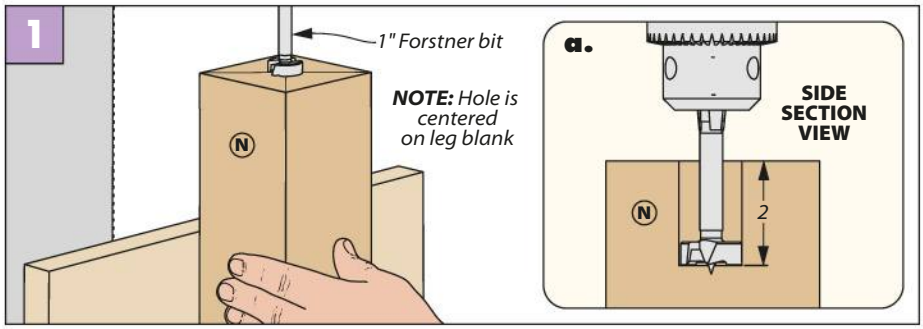

Backed Up Drilling. Use an auxiliary fence to support the legs while drilling the holes. Retract the bit periodically as you go, to clear the chips.

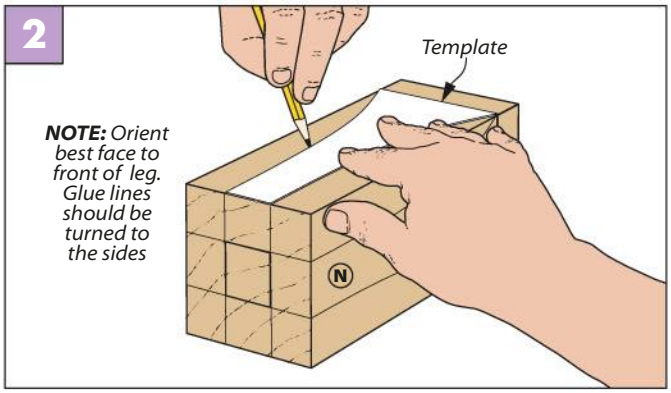

Draw the Profile. When the leg blank is cleaned up after the glueup it's time to trace the leg profile on all four sides. Use a sharp soft-leaded pencil to leave a crisp dark line instead of a marker that will occasionally bleed.

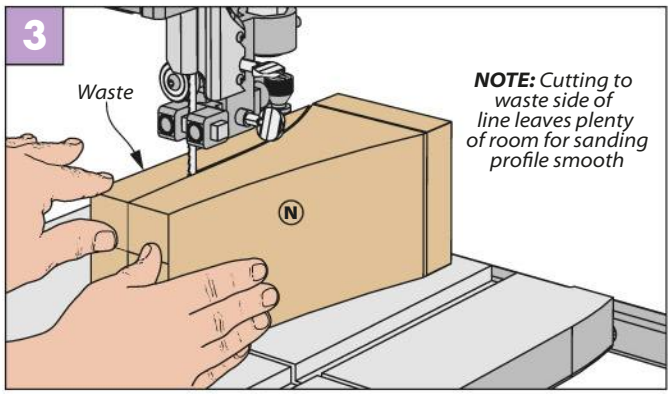

First Pass. The first step is to cut away the waste on opposing sides of the leg blank. Stay to the waste side of the line while making the cuts. Keep the cut-off portions of the legs; you'll need them next.

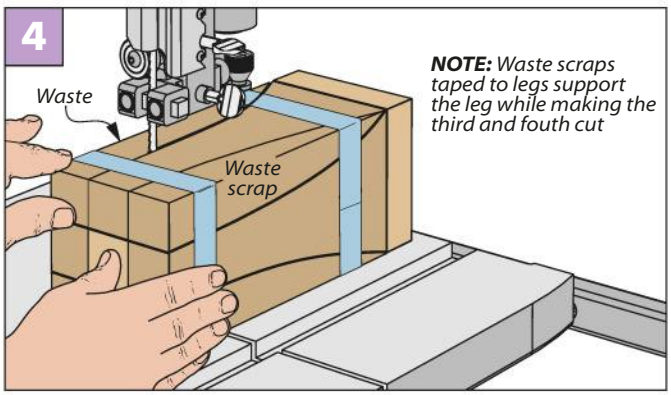

Second Pass. Taping the waste portions back on the leg blank allows you to see the cut lines and safely make the profile cuts on the other two faces of the leg. When the cuts are done, sand the legs smooth.

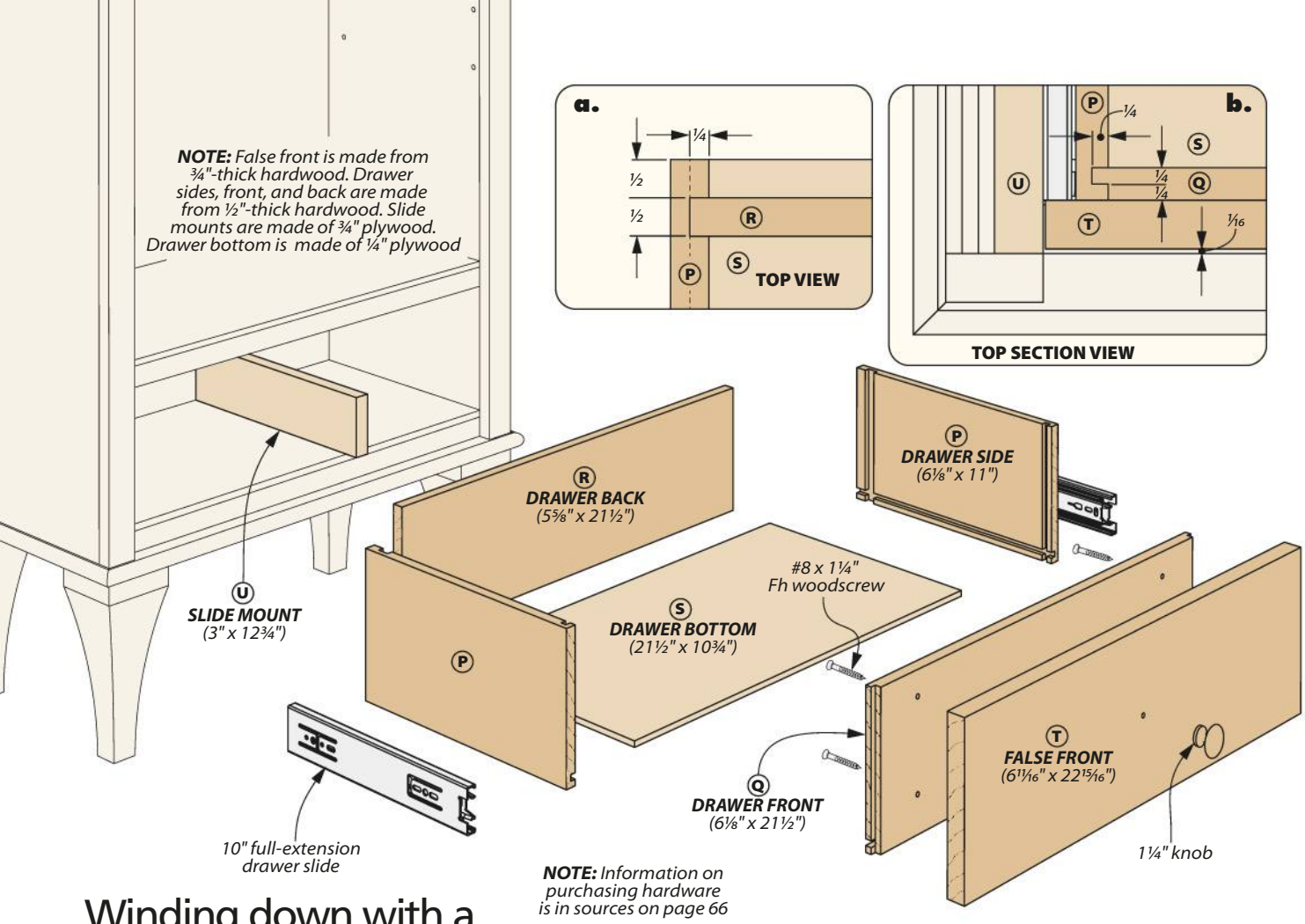

Winding down with a DRAWER & SHELVES

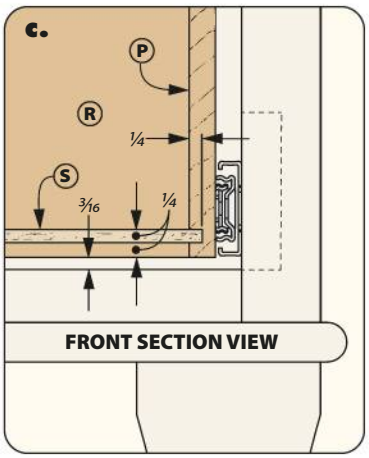

There are just a handful of things you need to do to complete the bookcase. You'll start by making the drawer you see in the drawings above, then mounting it to the case. After that, you have a couple of shelves to make — adjustable ones with hardwood edging. Beyond that, it's just a matter of stain and finish. Let's get to work on the drawer.

THE DRAWER. The drawer you see above is a maple box with a cherry false front. There are two reasons behind choosing maple: first, it's a durable wood that can take a beating; second, since it's left unstained it brightens the interior of the drawer.

As for the false front, it's main purpose is to hide the drawer slides that attach the drawer to the cabinet. There is another type of joinery that would allow you to integrate the cherry drawer front into the box. It's known as a "lipped locking rabbet." The joint is structurally the same as a locking rabbet, but the front lip extends beyond the drawer box to cover the drawer slide. But with a drawer this size, I prefer to use a false front and stick with the tongue and dado joint you see in detail 'b'— it's not as fussy to make.

To get started on the drawer box, I milled the parts to thickness and cut them to finished size. The next step is to cut the dadoes in the sides. Detail 'a' shows the wider of the two that's toward the rear for the drawer back. The narrow dado is near the front edge of the sides. A dado blade along with an auxiliary rip fence at the table saw are used to make this joinery.

Before you leave the table saw, cut the groove along the lower edge of the sides and front for the plywood bottom. The drawer back has no joinery — it sits on top of the drawer bottom. The drawer bottom is the last piece to cut for the box.

GLUE UP. After gluing up the drawer box, slide the drawer bottom in place (under the back) and pin nail it to the back. Next, nail the slide mounts in the case (detail 'b'), then install the drawer slides to the mounts and the drawer slides (detail 'c').

Put the drawer in the bookcase with double sided tape on the face, then center the false front in the opening. Press it firmly against the drawer box with an even gap all around. Remove the drawer and screw the false front to the drawer box.

SHELVES & EDGING. Lastly, cut the two adjustable shelves and their edging to size. It's just a matter of gluing the edging to the front of the shelves, as you see in detail 'a' above, and you're done with this project. Other than the fact you'll need a friend to help move this dignified bookcase to its new home. W

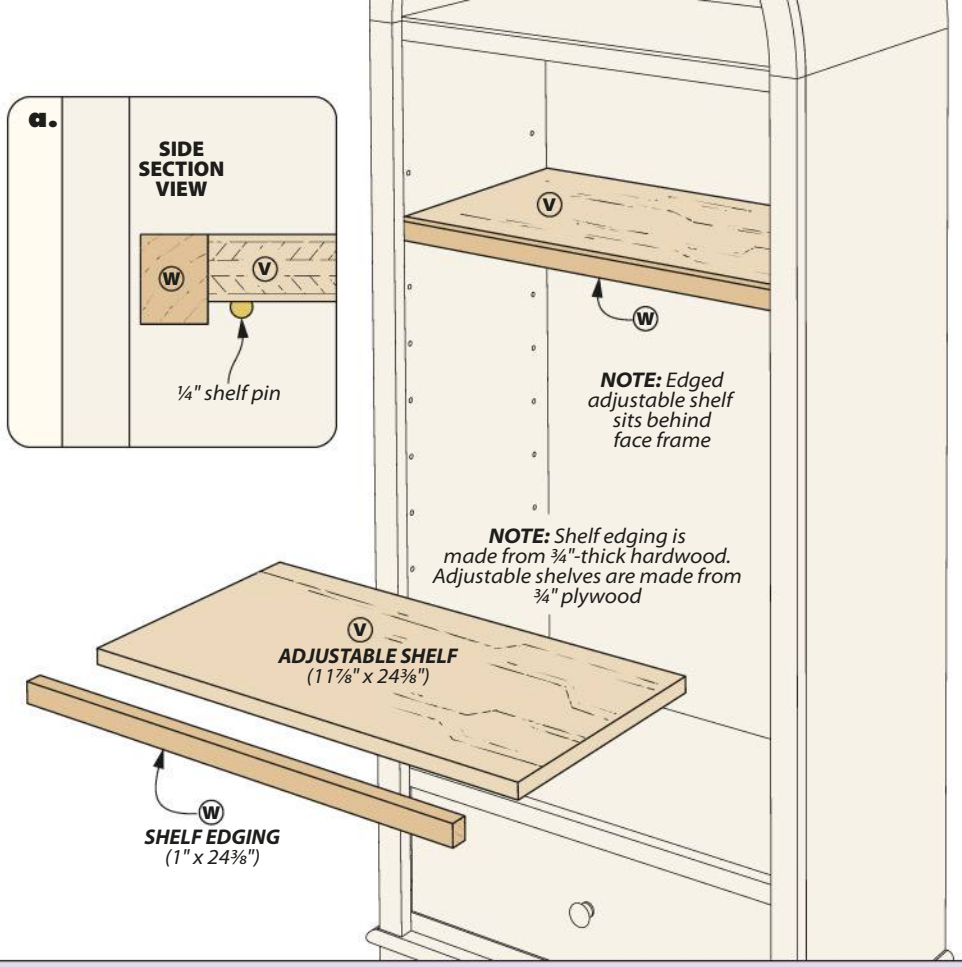

Materials, Supplies & Cutting Diagram

A	Sides (2)	¾ ply. -13¼ x 48¼	**K**	Plinth (1)	¾ ply. -13 x 24	**U**	Slide Mounts (2)	¾ ply. - 3 x 12¾
B	Top/Bottom (2)	¾ ply. -12 x 25	**L**	Plinth Side Banding (2)	¾ x 1½ - 14½	**V**	Adj. Shelves (2)	¾ ply. - 11⅞ x 24⅜
C	Drawer Divider (1)	¾ ply. -12 x 25	**M**	Plinth Front Banding (1)	¾ x 1½ - 27	**W**	Adj. Shelf Edging (2)	¾ x 1 - 24⅜
D	Fixed Edging (3)	¾ x 1 - 24½	**N**	Legs (4)	3½ x 3½ - 9	•	(1) 12" x 1" Dowel	
E	Barrel Vault (2)	⅜ ply. - 44⅞ x 14½ *	**O**	Plinth Filler (1)	¼ ply. - 12 x 24½	•	(10) #8 x 1½" Fh Woodscrews	
F	Vault Veneers (2)	14½ x 44⅞ rgh.	**P**	Drawer Sides (2)	½ x 6⅛ - 11	•	(1pr.) 10" Full-Extension Drawer Slides	
G	Back (1)	½ ply. - 25½ x 60¾	**Q**	Drawer Front (1)	½ x 6⅛ - 21½	•	(1) 1¼" Knob	
H	Case Veneer (1)	17¼ x 144 rgh.	**R**	Drawer Back (1)	½ x 5⅝ - 21½	•	(4) #8 x 1¼" Fh Woodscrews	
I	Case Edging (2)	¾ x 1½ - 48	**S**	Drawer Bottom (1)	¼ ply. - 21½ x 10¾	•	(8) Shelf Pins	
J	Arc Segments (3)	¾ x 4¼ - 15⅝	**T**	False Front (1)	¾ x 6 11/16 - 22 15/16			

1¾" x 7½" - 42" Cherry (4.4 Bd. Ft.)

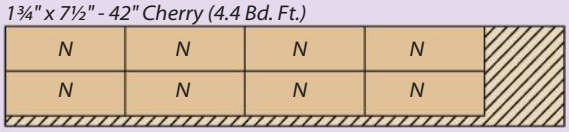

¾" x 8" - 48" Cherry (2.7 Bd. Ft.)

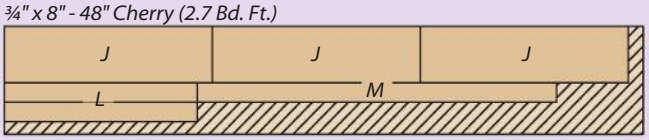

¾" x 8" - 78" Cherry (4.3 Bd. Ft.)

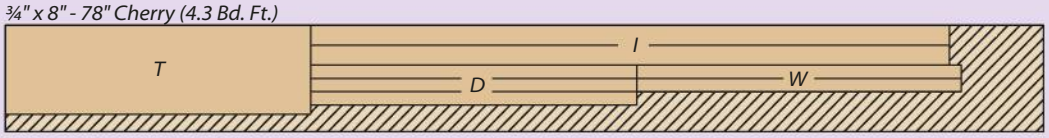

**Denotes part E plywood size before final trim*

½" x 6½" - 72" Maple (3.3 Sq. Ft.)

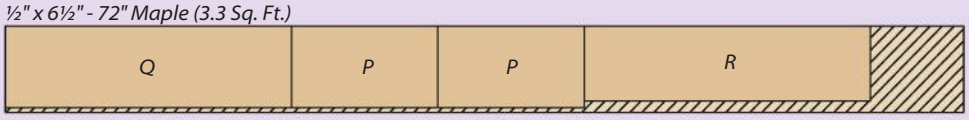

***ALSO NEEDED:** One 48" x 96" Sheet of ¾" Cherry Plywood, One 48" x 48" Sheet of ¾" Cherry Plywood. One Sheet of 48" x 96" ½" Cherry Plywood. One Sheet of 48" x 48" ¼" Maple Plywood*

Written by: Phil Huber; Project Design: Dillon Baker

Coffee Center

Pour yourself a cup of liquid motivation (and grab a snack) while you plan your next move in the shop.

Psychologists call it the "flow state." It's the feeling when I'm deep in a project and time flies by. A glance at the clock — along with the rumbling in my stomach — shows that lunchtime has come and gone. It would be nice to keep up the momentum rather than break the spell to go inside and grab a fresh cup of coffee and a bite to eat.

Here at *Woodsmith*, Dillon Baker and I trade duties making the morning coffee. Over the morning's first cups, this project idea was hatched: We dreamed of having a coffee maker in our own shops. Sure, you could get by with a clear spot on a shelf. But you need a place for the coffee, filters, sweetener, a few mugs for when friends drop in ...

Dillon took it from there. He came up with the narrow cabinet you see. Then he kitted it out with a small microwave and a matching fridge. Perfect. These are the building blocks to sustain long shop sessions. In order to avoid getting carried away, the project is made with plywood pieces joined with pocket screws. Now I need a soft shop chair — to "plan" in.

▲ Complete the center with a small fridge and a microwave. They both tuck into the lower cabinet. Another option is to use the space for shop storage.

▲ This project employs pocket screw joinery for most of the connections. Smart placement keeps the holes hidden from view.

▲ Gas piston lifts hold the upper door clear for access to the compartment. The lifts allow you to set the angle of the door so you won't bump your head.

Illustrations: Bob Zimmerman

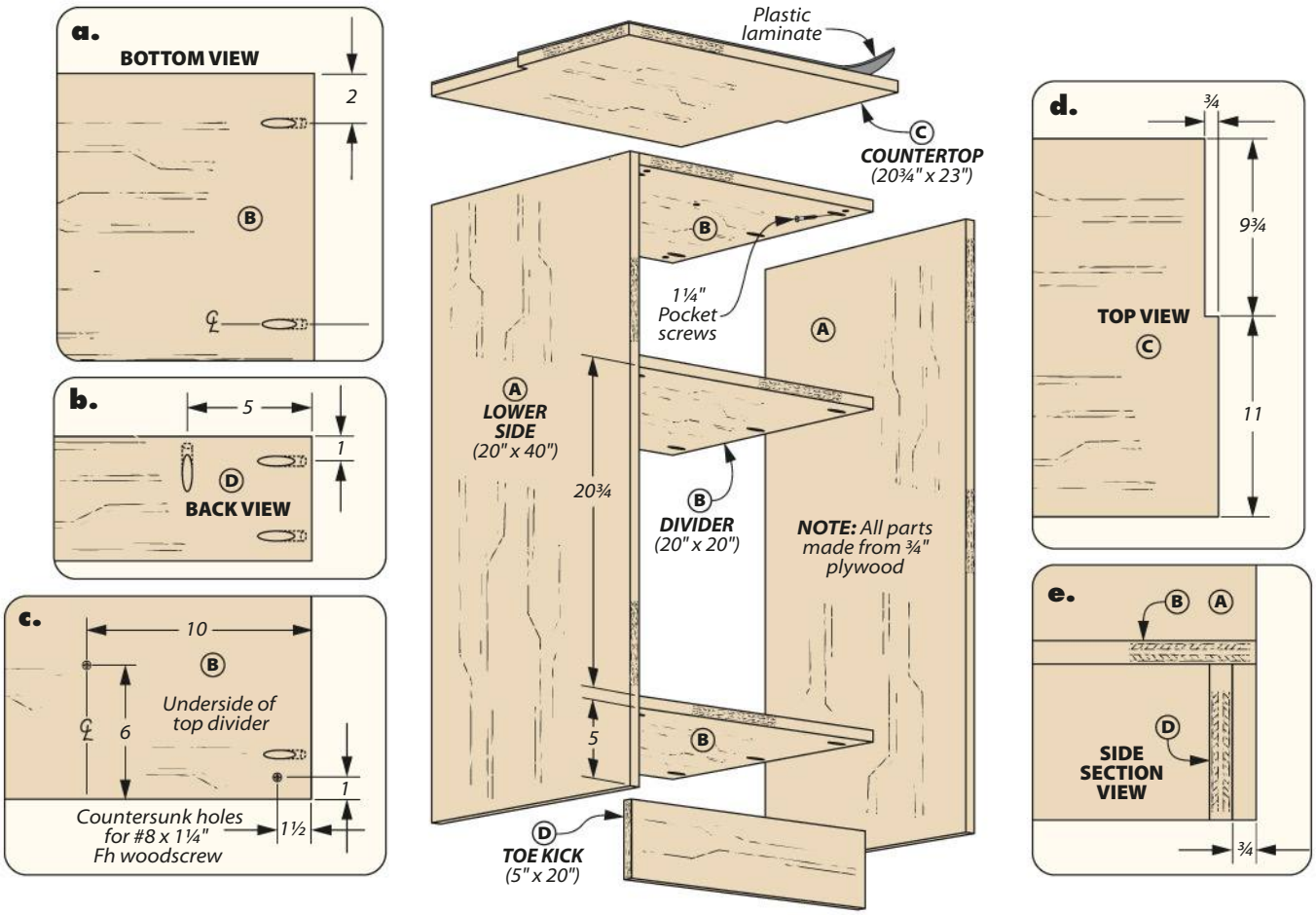

A Tale of Two **CASES**

The overall shape of the project is that of a clean-lined, step-back cupboard. You can definitely see some Shaker and some country in its family tree. This generation uses plywood for the panels.

Dillon chose Baltic birch for this example, allowing the uniform edges to play a role in the look of the finished piece. Personally, I think a version that used glued-up, one-by construction lumber would look sweet.

▲ The *Kreg* 720 pocket hole jig clamps to plywood panels while lying flat. This means you don't have to balance large pieces on edge while drilling holes.

SIZING PARTS. Full-size, heavy plywood sheets can be tough to hoist around the shop. To ease the burden, you can have the sheets broken down into roughly sized parts at the home center. At the least, have the sheets cut into smaller pieces for better maneuvering.

Back in your workshop, you can do the final sizing with a table saw or track saw. What's important is that corresponding parts are identical. For example, the two sides, as shown above. This leads to a square assembly.

POCKET SCREWS. Since we're using pocket screws to hold pieces in place, you don't need to account for joinery when sizing dividers. Just cut them to the sizes listed above. Get out the pocket hole jig and start drilling holes on the ends of all the dividers, as shown in detail 'a.'

The upper divider is flush with the top of the sides. The locations for the bottom and middle panel are called out in the main drawing. In addition to the pocket screws, I added a bead of glue for an even stronger connection.

A few assembly squares are handy to ensure the pieces are correctly aligned. In order to prevent shifting, I pull clamps across the parts as I drive the screws into place.

TOE KICK. At the front of the case, the lower divider rests on a toe kick. Detail 'b' reveals the holes on the upper edge and ends. Then take a look at detail 'e' for the kick's setback.

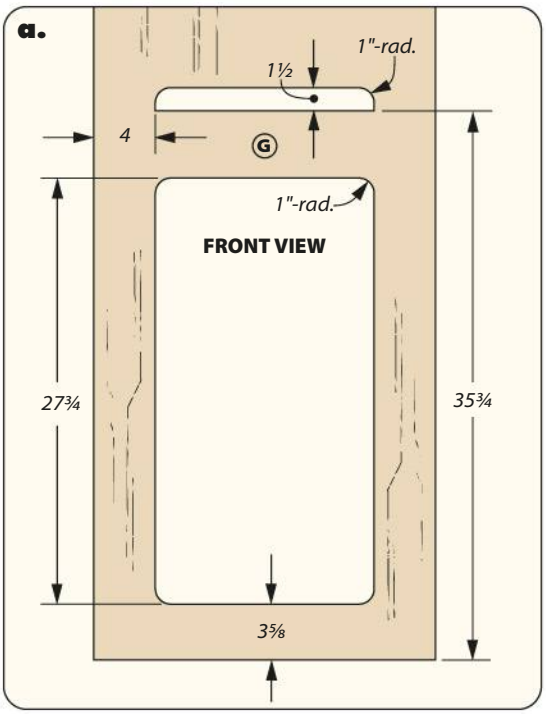

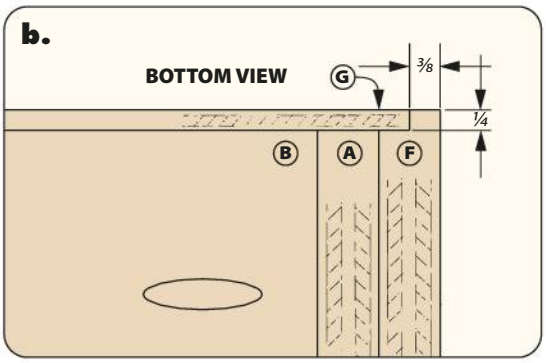

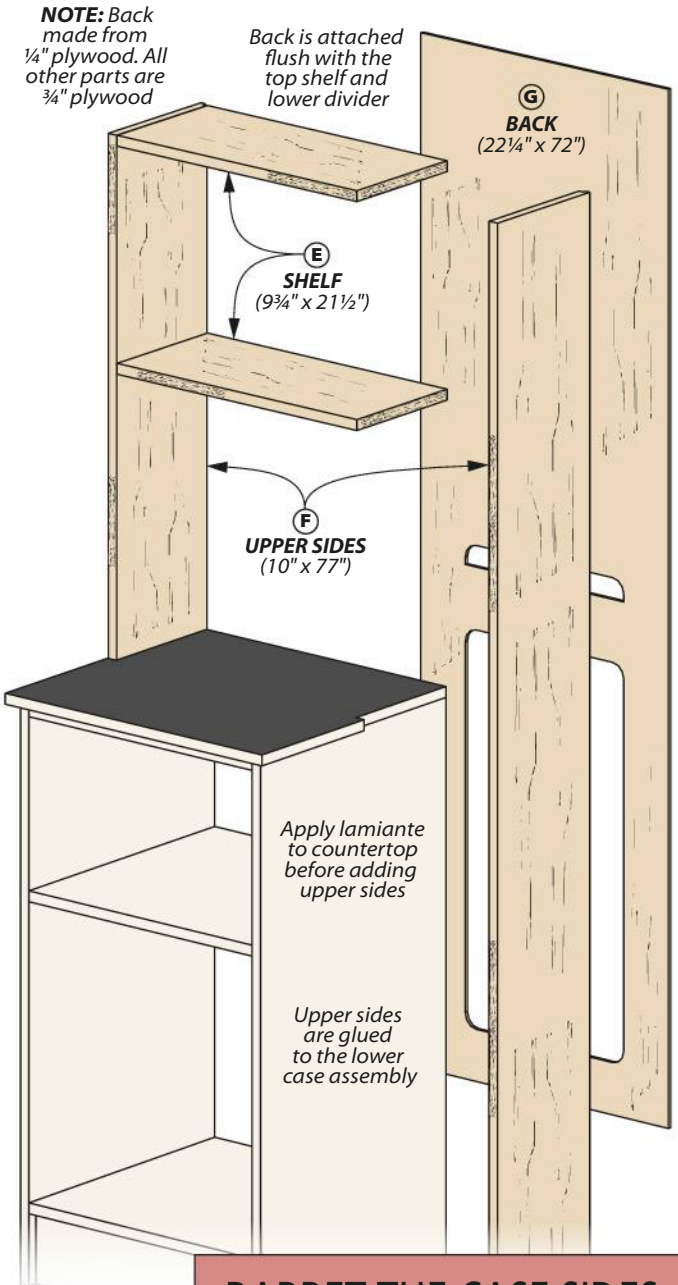

Here again, I used glue along with the screws.

COUNTERTOP. The final piece to add to the lower section is the countertop. A long notch on each end makes it flush with the sides (detail 'd'). At the front it overhangs on the ends and front edge. The countertop is attached with glue and screws from below. I covered it with plastic laminate. The laminate is attached with spray contact adhesive. I'll get into more of that process on the next page.

UPPER CABINET

On a typical step-back cupboard, the sides are relieved. On this one, long narrow sides tuck into the notches in the countertop and overlap the lower case, extending to the floor, as you can see above.

The added thickness creates a robust case. The sides have a rabbet to accept the back panel. You can cut this at the table saw with the setup shown at right.

SHELVES. Two shelves bridge the sides. They're flush at the front and even with the rabbet in the back. As before, these are attached with pocket screws.

BACK PANEL. The back is cut from plywood. Detail 'a' shows a couple of cutouts you need to make. This creates access for cords and to ventilate the appliances.

RABBET THE CASE SIDES

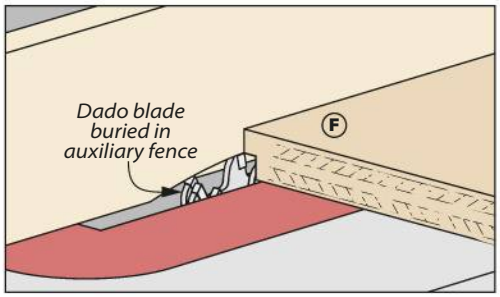

Buried Blade. Recess a dado blade in an auxiliary rip fence in order to set the width of the rabbet to match the plywood's thickness.

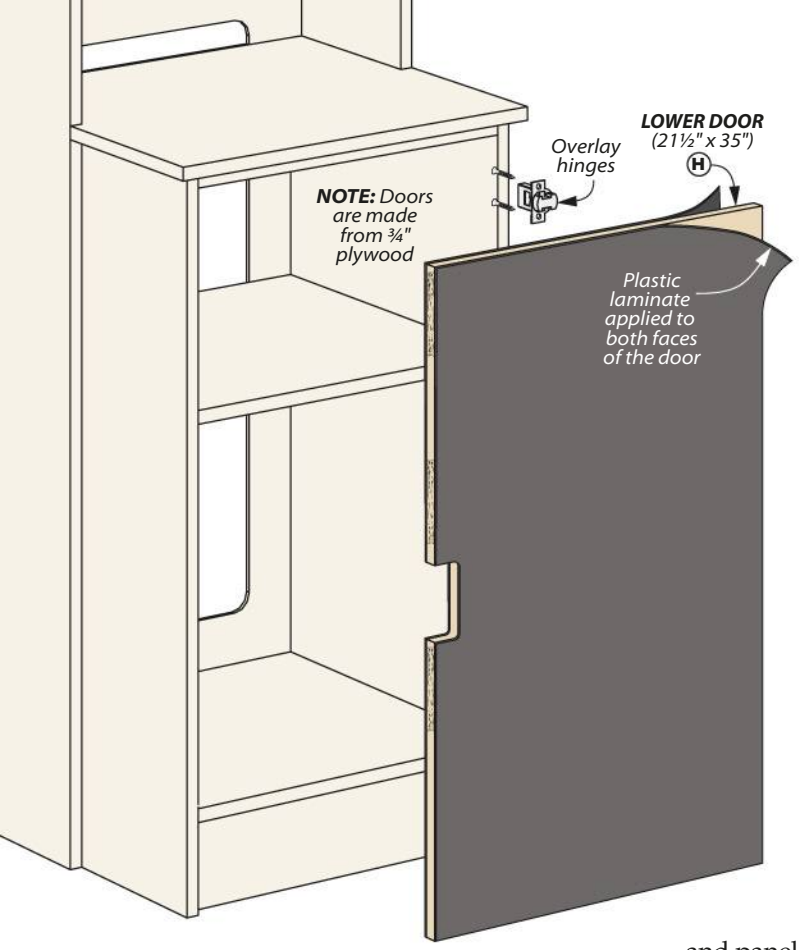

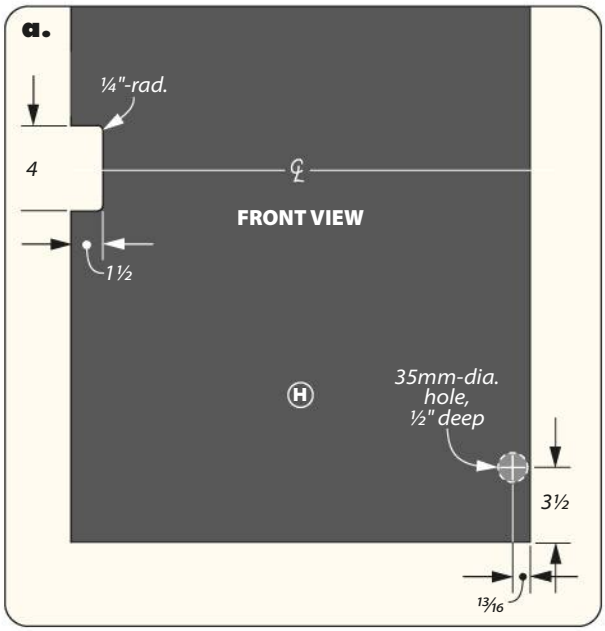

The easiest **DOORS**

Two parts remain on this project: the doors. In keeping with the construction we've used so far, the doors are straightforward plywood panels — with a few details added.

Doors clean up the look of the cabinet, allowing you to keep the items stored out of sight. Another function is to minimize the amount of dust that gets into the compartments. Since this will live in a shop, you'll need to clean off dust periodically. The ventilation openings on the back (though necessary) will allow dust inside as well. A few blasts from an air compressor clears away accumulated dust from the appliances inside.

A QUICK ASIDE. Earlier I mentioned making this project from construction lumber. If you take that route, the doors could be made from glued-up panels with battens attached to the back to keep them flat. Or you could dress it up with frame and panel assemblies.

BUILT-IN HANDLES. Instead of using hardware handles on the doors, Dillon created cut-out handles, as shown in detail 'a.' Forming the handles begins with a clear layout on both faces of the door. I drilled out the corners with a Forstner bit at the drill press, then I cut just inside the lines with a jig saw. The closer you can work, the better.

With most of the waste removed, it's time to refine the shape. I used rasps and files to do this. As you work, keep an eye on both faces so the handle opening is square.

PLASTIC LAMINATE. Both faces of the doors are covered in plastic laminate. This balances the door so

SHOP TIP: FLUSHING IT OUT

Flush Trim. A palm router with a flush-trim bit is ideal for tasks like trimming laminate. Adhesive can build up on the bit's bearing. If necessary, remove the gunk with acetone.

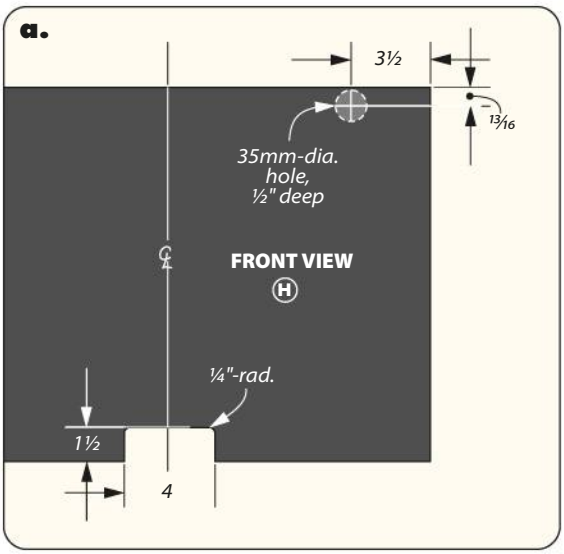

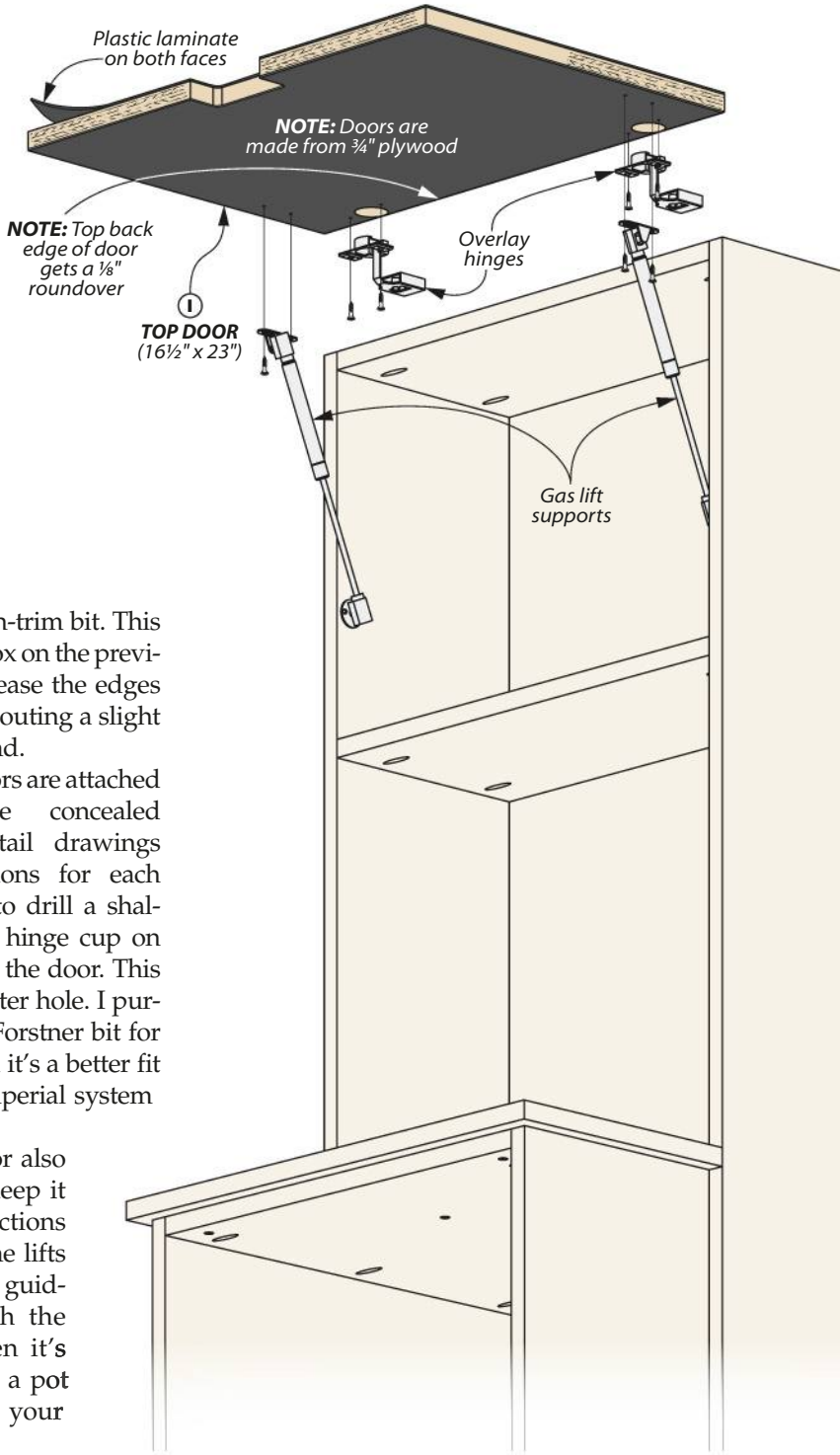

that it won't warp from uneven moisture exposure.

SIDE NOTE. You'll remember the countertop only has laminate on one side. The back face is held tight to the case, so in the moisture sense, it's balanced as well.

Cut the laminate at least 1" oversized in each direction. This makes it easier to apply. It also reduces the stress of this task.

Spray contact adhesive is my preferred choice for applying laminate. It dries fast and doesn't have strong fumes compared to roll-on contact cement. You do need to apply a coat of glue to each of the mating surfaces. The spray dries in a couple minutes.

Carefully center the laminate over the workpiece and lower it in place. The cement grabs as soon as the pieces touch. For a strong bond, roll out the laminate with a J-roller. The excess laminate overhanging the edge can be trimmed flush with a router and a flush-trim bit. This is shown in the box on the previous page. I also ease the edges with a file or by routing a slight chamfer all around.

HINGES. Both doors are attached with Euro-style concealed hinges. The detail drawings show the locations for each door. You need to drill a shallow hole for the hinge cup on the inside face of the door. This is a 35mm diameter hole. I purchased a metric Forstner bit for these tasks. I find it's a better fit than using an imperial system equivalent.

The upper door also has gas lifts to keep it open. The instructions provided with the lifts do a good job of guiding you through the installation. Then it's time to brew up a pot and contemplate your next project. W

Materials & Supplies

A	Lower Sides (2)	¾ ply. - 20 x 40
B	Dividers (3)	¾ ply. - 20 x 20
C	Countertop (1)	¾ ply. - 20¾ x 23
D	Toe Kick (1)	¾ ply. - 5 x 20
E	Upper Sides (2)	¾ ply. - 10 x 77
F	Shelves (2)	¾ ply. - 9¾ x 21½
G	Back (1)	¼ ply. - 22¼ x 72
H	Lower Door (1)	¾ ply. - 21½ x 35
D	Upper Door (1)	¾ ply. - 16½ x 23

- (23) #8 x 1¼" Pocket Screws
- (6) #8 x 1¼" Fh Woodscrews
- (4) 110° Overlay Hinges w/Screws
- (2) Gas Lift Supports w/Screws
- (1) 48" x 97" Sheet of Plastic Laminate

ALSO NEEDED: Two 48" x 96" sheets of ¾" Baltic birch plywood and one 48" x 96" sheet of ¼" birch plywood

Waterfall Nightstand

Are you looking to take a journey into a furniture style that boasts solid construction, combined with some impressive veneer work? This nightstand is for you.

Nestled inside the Art Nouveau furniture movement was an affordable alternative known as waterfall furniture. This genre showed up in the 1920s and had a good run through the depression on to the end of war in the 40s.

The original intent was to provide attractive, stylish furniture for young families on a tight budget. This goal was accomplished by using veneered plywood as the structural core and decorative surface of the furniture. Eliminating the laborious expense of traditional framed hardwood structures meant more effort could be put into the creative process.

Most of the original versions were dressed with blonde veneers such as padauk or Carpathian elm. Walnut, like our version, was used as well, just not as much as the other woods.

The nightstand you see here is an upgrade to its ancestor. While it pays aesthetic homage in the veneered waterfall front and door, it also protects that veneer by trapping it between solid walnut sides that won't suffer the bane of veneers: chipped edges. If you're convinced, turn the page and dive in.

▲ The visual energy put off by the grain patterns of the solid walnut sides and the veneer are calmed by the curves and coves of the nightstand.

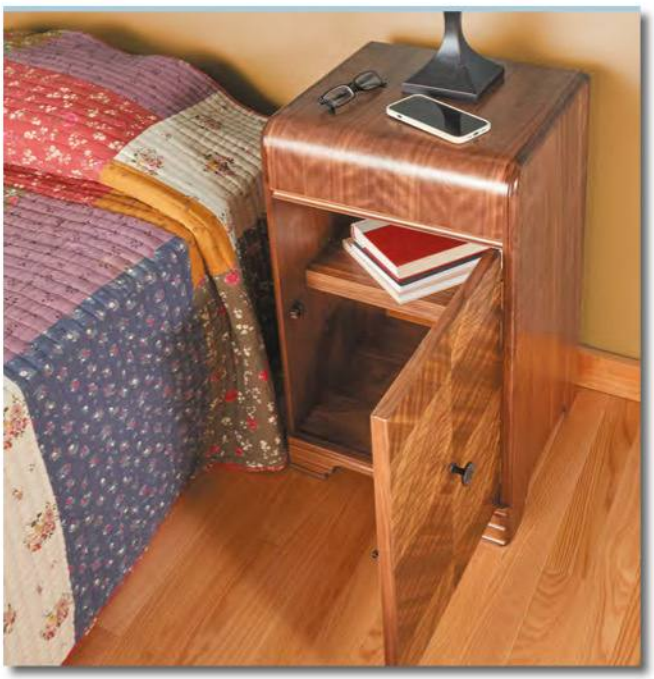

▲ Inside the nightstand you'll find plenty of storage. There's also an adjustable shelf that lets you customize the space to suit your bedside library.

Written by: Erich Lage; Project Design: Dillon Baker

Illustrations: Dirk Ver Steeg

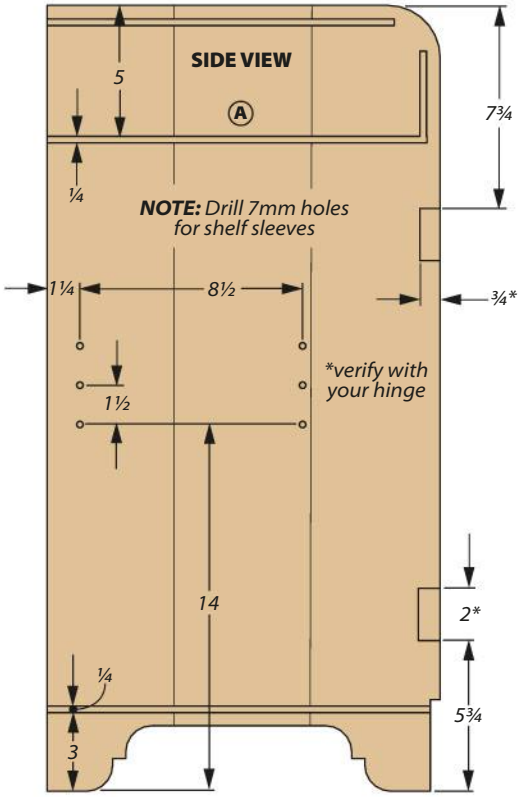

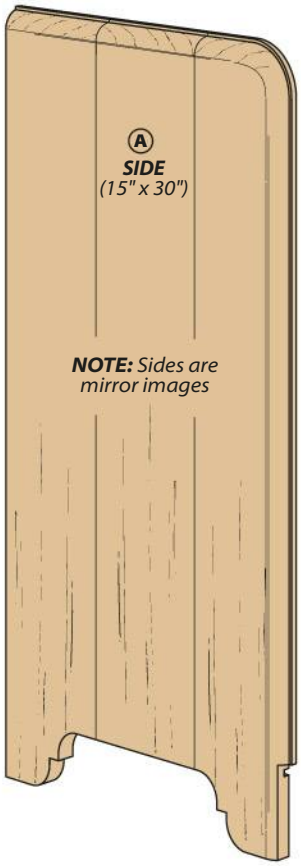

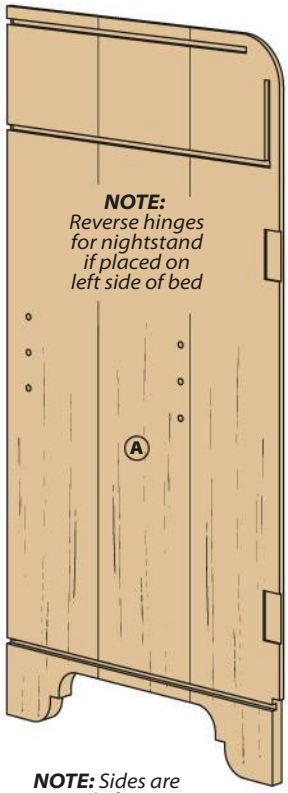

Solid-wood SIDES

Gluing up the walnut panels is the first order of business when making the sides of the nightstand. While the glue and clamps are doing their work, let's review the tasks at hand.

First you'll form the joinery that accommodates the waterfall assembly, the bottom, and the divider (parts that you'll make later). Then it's time to shape the profile of the sides. This involves the arc at the top and the decorative cutout at the bottom. Back on the inside faces, you'll have hinge mortises to cut out and holes to drill for shelf supports.

DADOES & GROOVES. As you see in the main drawing above and the Side View, there are three dadoes, two stopped, and one through. Figure 1 on the next page shows making the dado that runs the width of the side for the bottom at the table saw. Detail 'b' shows this as well.

GO 2 Online Extras

For the base pattern, and to learn how to make the veneer pattern for the door go to:

Woodsmith.com/274

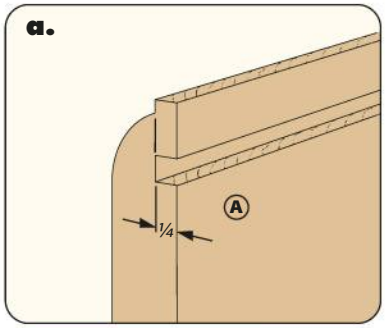

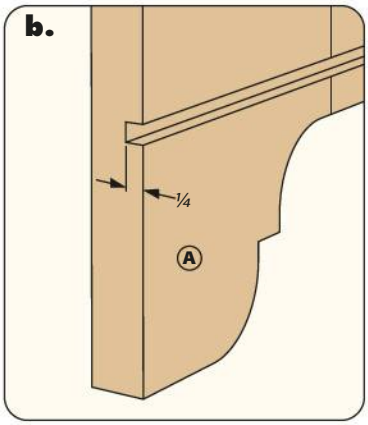

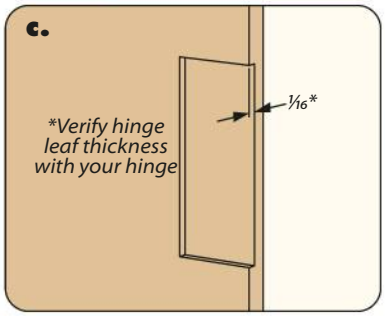

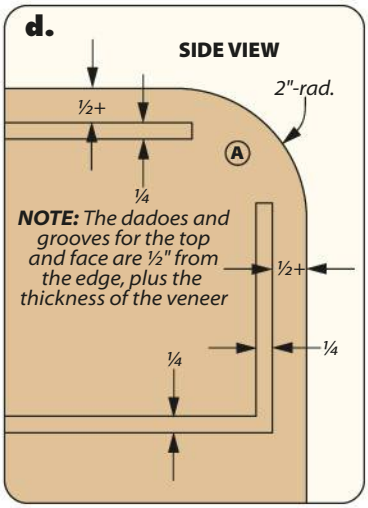

To make the stopped dadoes, use a plunge router with a straight bit and a fence to guide the tool. Figure 2 shows making the short stopped groove for the

tongue on the waterfall face. This is shown in detail 'd' along with the ends of the stopped dadoes.

SIDE PROFILE. In keeping with the Art Nouveau notion that square is boring — there are two details to attend to with that goal in mind. The first is making the rounded corners you see on the top outer edge of the sides, and in detail 'd' on the previous page. After drawing the radius on the corner, use a jig saw (or make a trip to your band saw) to rough out the shape. Then sand the corner smooth.

When both sides are shaped it's time to rout the roundover that softens the edge of the sides. Figure 3 shows this step in action. It's a good-sized roundover, so you'll want to bring it to final shape in multiple passes.

DECORATIVE CUTOUT. There is some function to the cut out at the bottom of the sides; the opening creates legs in the corners adding stability to the nightstand. There's a pattern online at *Woodsmith.com/274* that you can use to make a hardboard template. (You'll use the template later on the apron as well.)

Start by tracing the outline on the sides with a pencil. Now you can fetch your jig saw and rough out the openings on both panels to the waste side of the line. To make the profile crisp and smooth, attach the template to the sides with double-sided tape. Now you'll chuck a pattern bit into your router and remove all the waste you can. Pry the template off and repeat the process on the other side. All you have left is to square up the two corners where your router bit couldn't reach. Figure 4 shows the next step. It's cutting a notch on the bottom outside edge for the front apron.

HINGE MORTISES. Lay out and cut mortises for the hinges on the inside face of the right side. The main drawing and detail 'c' on the previous page shows the details. By the way, if you're building matching nightstands, you'll want to hinge the door on the left side to make a mirrored set. It's a good idea to use the hinge leaf to establish the depth of the mortise.

SHELF SUPPORTS. The shelf supports used here are a two-part system. You can drill the sleeve counterbores now. Later, you can press the sleeves in place.

SHAPING THE SIDES

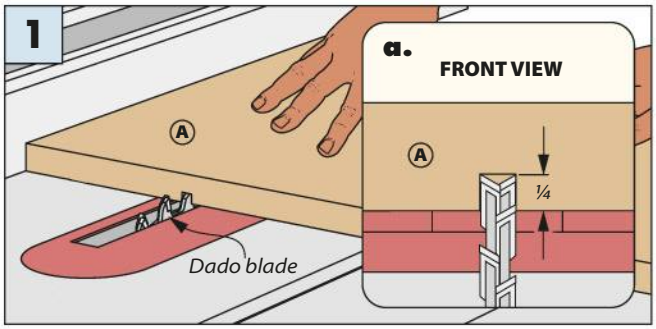

Long Dadoes. The dado for the case bottom can be cut at the table saw. The cut runs the width of the side and is just above the decorative cutout.

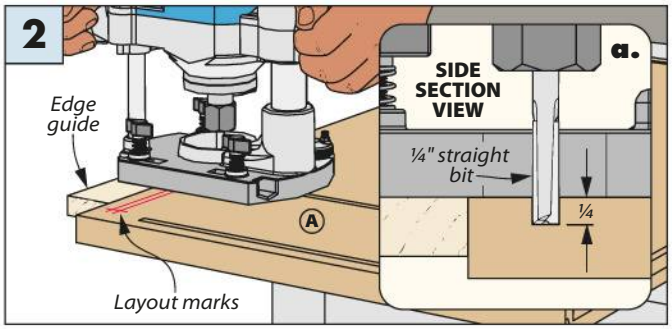

Short Grooves. A fence attached to your hand-held plunge router makes it easy to rout the short grooves in the sides. When done, square up the corners with a chisel.

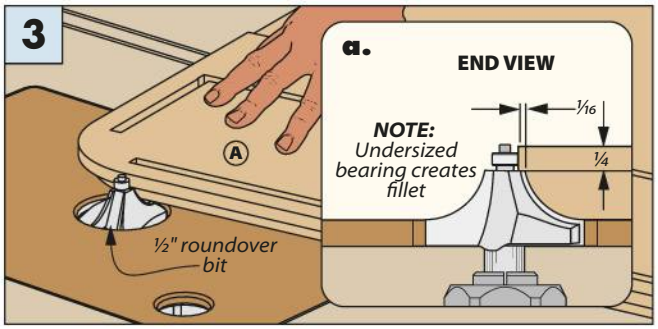

Add the Roundover. Use a roundover bit chucked into your router table to make the decorative roundover on the sides. To avoid burning the wood, do this in multiple passes.

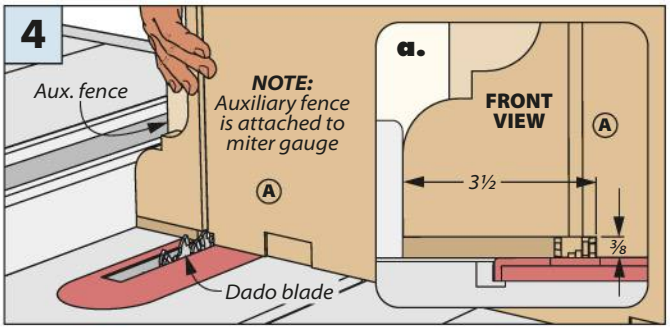

Cut A Notch. To make the notch for the apron on the front of the case, stand the side on edge and support it with an auxiliary fence attached to your miter gauge while cutting.

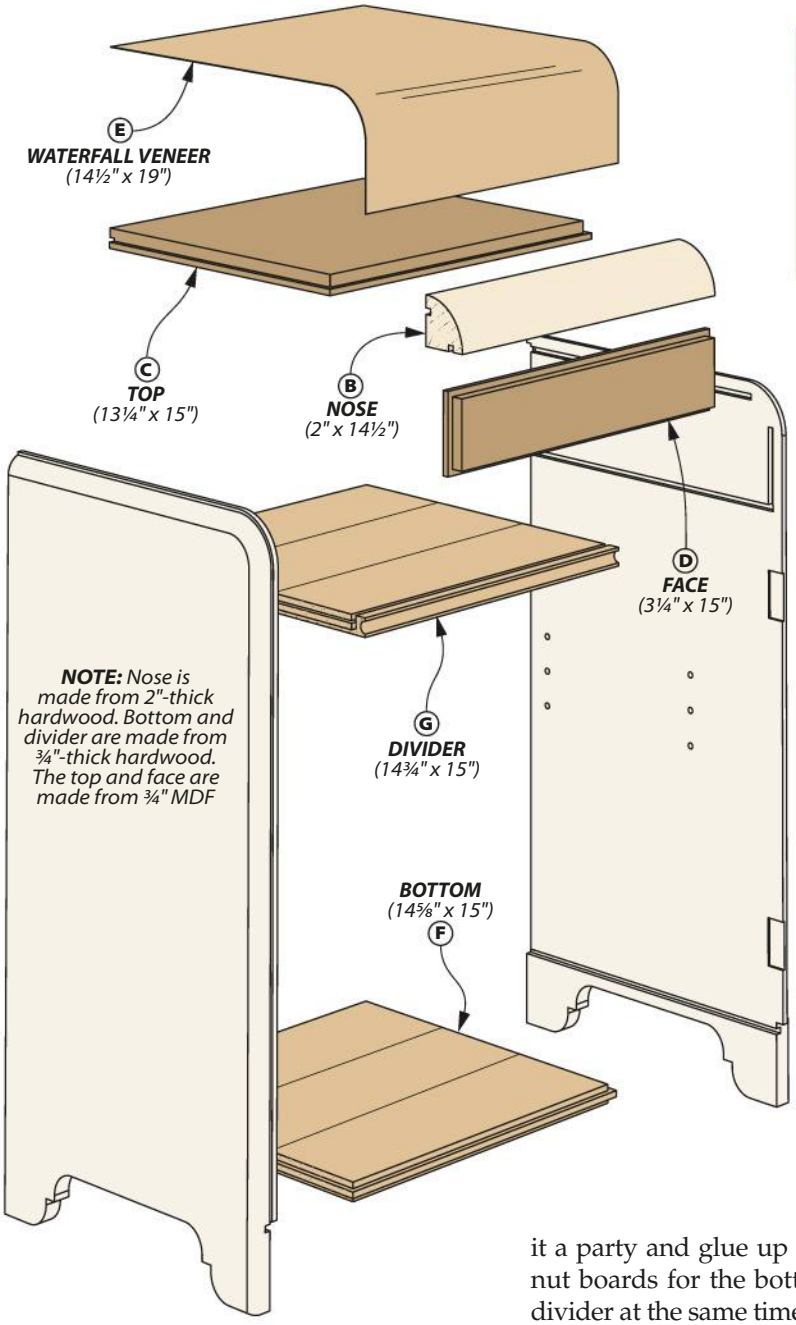

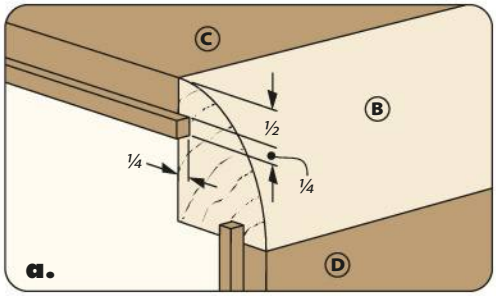

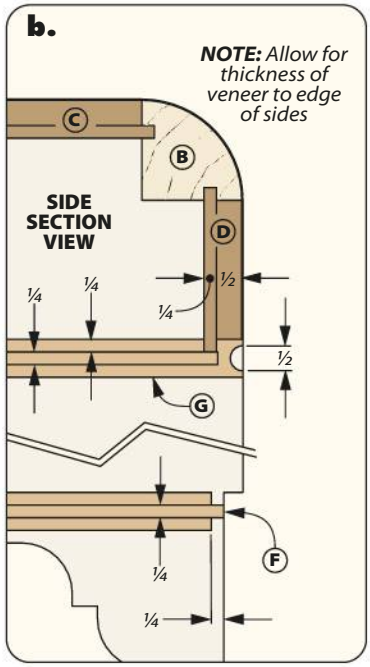

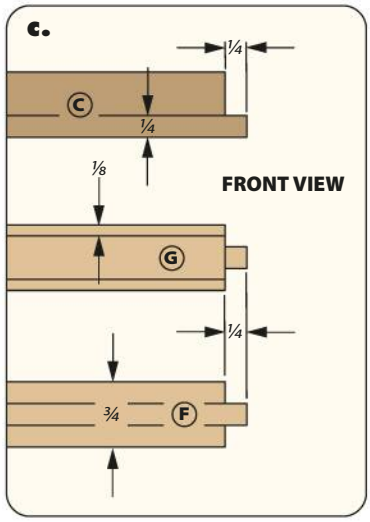

Next — AN INSIDE JOB

The inside work is next on this project's to-do list. The bottom and cove divider are made of glued-up walnut. The waterfall assembly is made of a poplar nose that's glued to an MDF top and face, then covered with walnut veneer.

The best place for you to start is making the waterfall assembly. That requires gluing up a poplar blank, so you might as well make it a party and glue up the walnut boards for the bottom and divider at the same time.

THICKNESS MATTERS. While the glue is drying this would be a good time to visit about how the waterfall assembly needs to fit between the sides. When all is said and done you want the veneer of this assembly to be flush to the sides — not above the edges where you'll ultimately have to deal with chipping. I'll point this out as we go along. Now back to work.

THE NOSE. With the clamps packed away, you can take the nose to the table saw and cut the grooves shown in Figure 1. Now for the other two parts of the assembly.

TOP & FACE. Figure 2 shows making the tongues on three edges of the top. When that's done, cut the tongues on all four edges of the face. Before you glue up the three parts, you'll want to test

fit the top and face in the sides. Now hold a scrap of the veneer against the edge. You can see why I told you to make the dadoes and grooves for the top and face ½" plus the thickness of the veneer. That process allows the sides to protect the edges of the veneer. Now you can glue up the waterfall parts.

DRY FIT. Figure 3 shows you what to do after the clamps come off the waterfall assembly. When you're scribing the ends of the nose, remember that you need to remove the thickness of the veneer beyond the line you're sc ribing.

Figure 4 shows a quick way to evenly remove most of the waste we're talking about. You'll have some quiet work left to do with rasps and files.

VENEER. Once you've cut an oversized piece of veneer (about an inch in all directions), Set the stage for success by staging every step along the way. When you're comfortable with the routine, it's time to open the contact cement.

Contact cement is the adhesive of choice for attaching the veneer to the assembly. Coat the two surfaces evenly and let them completely dry. When the surfaces are ready you can mimic what you see in Figure 5. Then you can turn the workpiece over and rub the two together. A palm router is ideal for trimming the veneer flush to the waterfall.

TWO MORE PARTS. Trimming the bottom and divider to size is next on your list. Then there's the one groove in the divider and the tongues to cut as well (detail 'b'). To make the cove in the front edge of the divider, head to the router table and install a core box bit. Stand the divider on edge and run it over the bit. Now you have all the parts ready for the case glue up. So grab your clamps and clamping squares and finish this stage.

MAKING THE WATERFALL ASSEMBLY

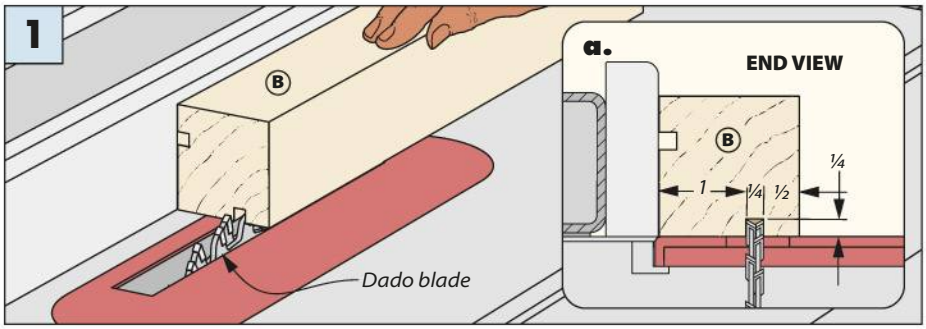

Grooves First. There are two grooves cut in the waterfall nose. One for the top, and the other for the face. Your table saw and a dado blade are perfect for this task.

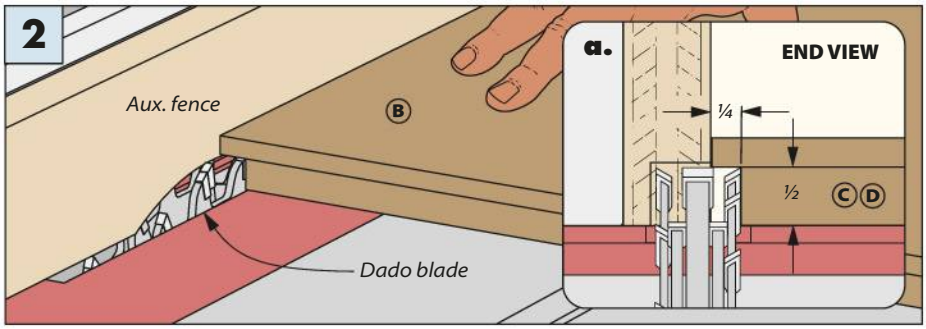

Tongues Second. After changing out the dado stack and adding an auxiliary rip fence, you can cut the rabbets that form the tongues in the top and face.

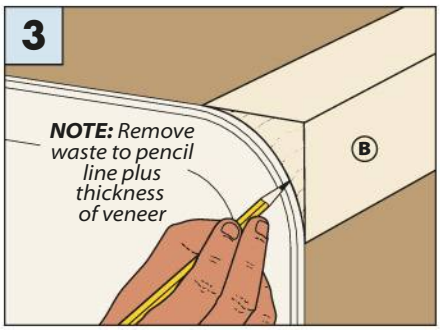

Dry Fit & Scribe. Dry fit the waterfall assembly between the sides and scribe the arc on to the nose.

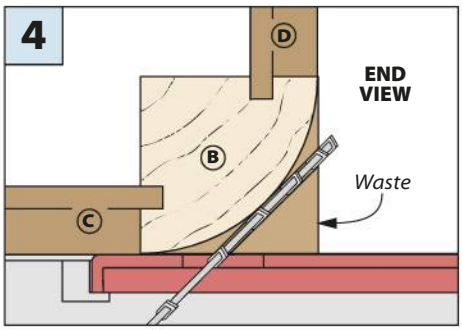

Rough Out the Nose. Remove most of the waste by tilting the blade and using the rip fence to guide the workpiece.

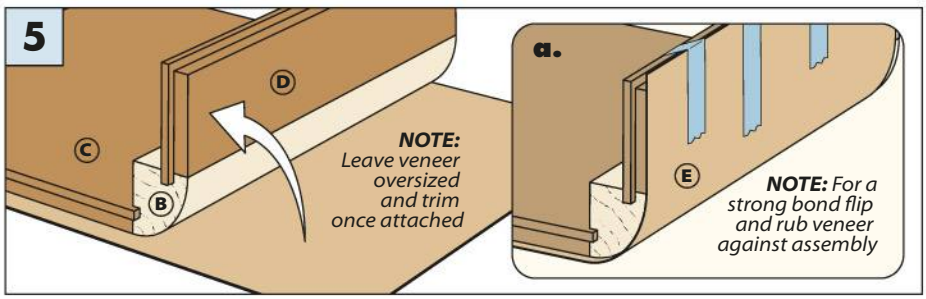

Glue Veneer to Waterfall Assembly. Use contact cement to adhere the veneer to the waterfall assembly. Tape holds the veneer in place.

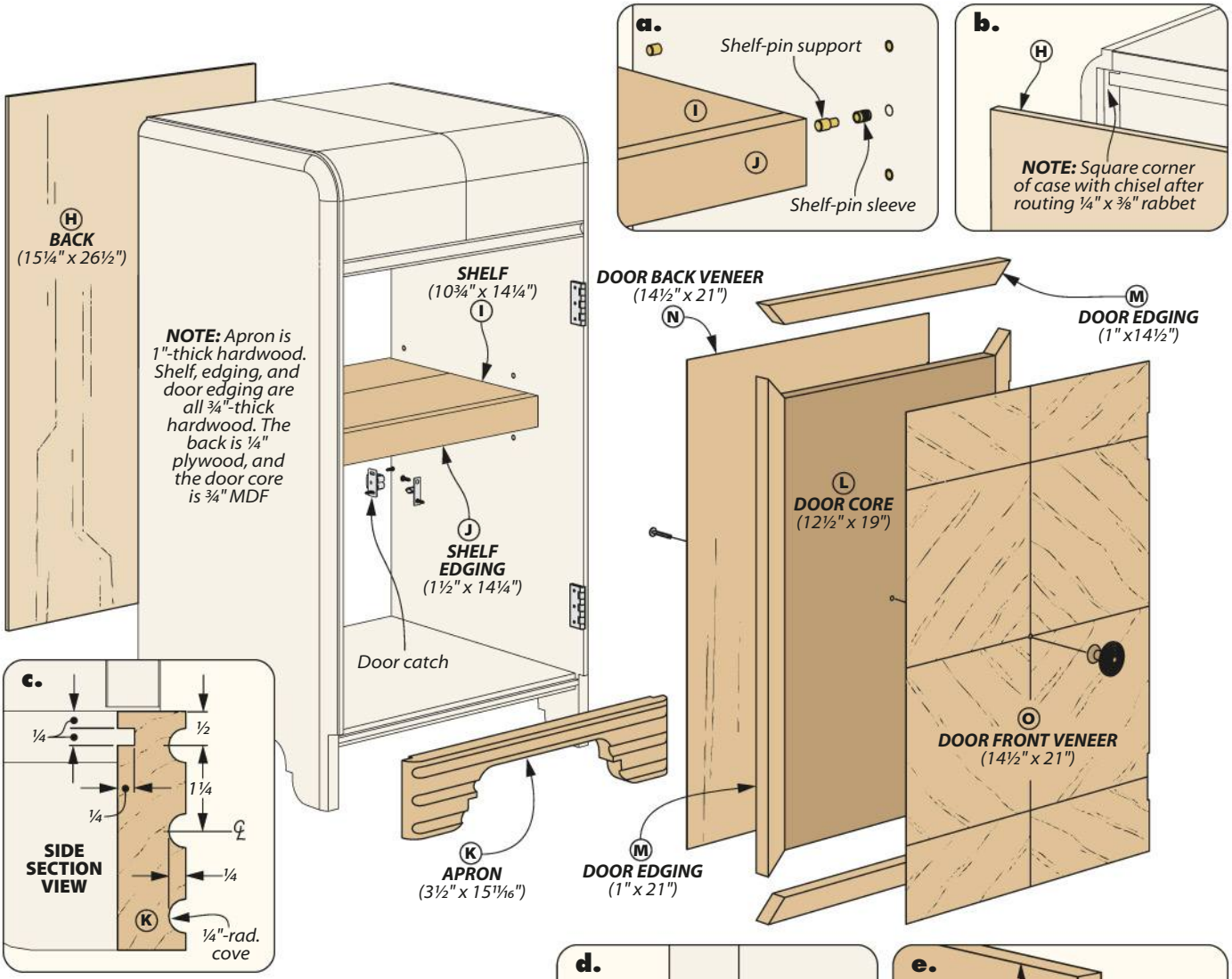

Finish with a fancy DOOR & MORE

Completing the nightstand involves a handful of tasks. You'll need to add the back, make the adjustable shelf, make the fluted apron, and create the veneered door. Let's get cracking.

THE BACK. Starting with the case, lay the case on its face and use a rabbeting bit in your router (detail 'b'). You'll need to square up the corners with a chisel. Then you can cut the back to size and nail it in place.

Next on the plate is the adjustable shelf and its edging (detail 'a'). If you didn't install the shelf support sleeves earlier, you can do that now.

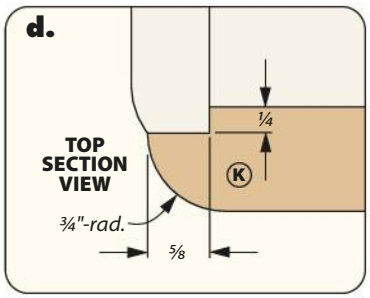

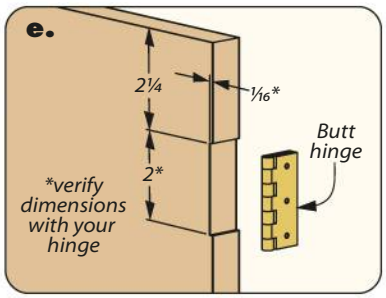

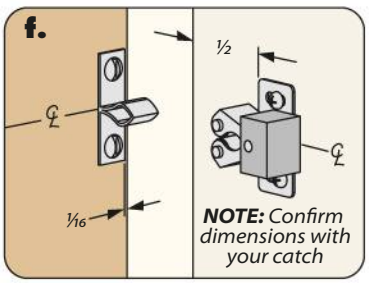

THE APRON. The apron is next on the agenda. First, cut the workpiece to size. Then add the rabbets on the ends as you see in detail 'd.' While rounding over the ends you don't want to have any chipout, so raise the bit between passes and work up to the final size. It's time to bring back the pattern you used on the sides and make the decorative opening that is centered on the apron — the main drawing shows what this looks like.

Adding the flutes, using a core box bit at the router table (detail 'c'), is the last thing to do before gluing the apron to the case. Now it's time to make the door.

MAKING A VENEER PATTERN

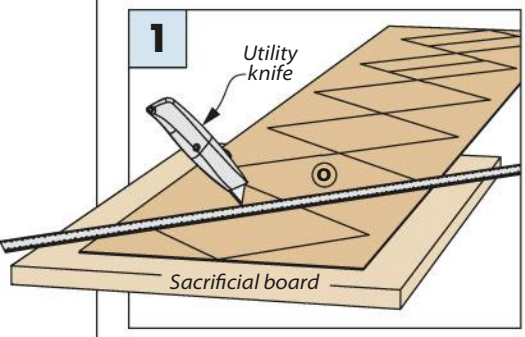

Harvest the Squares. Trace the door patterns on a length of veneer and cut free with knife and ruler.

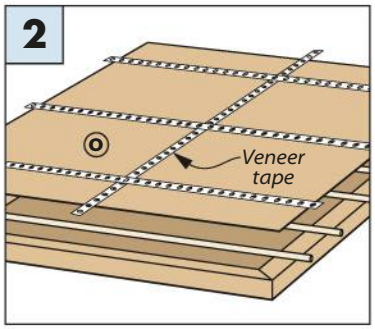

Get Sticky. Tape the patterns together and use contact cement to glue them to the door core.

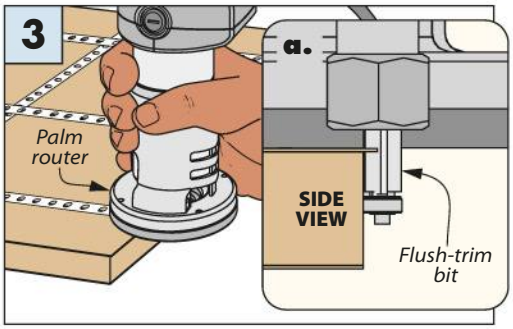

Trim to Fit. A palm router with a flush-trim bit is the ideal tool to trim the veneer flush to the sides of the door.

ADD A DOOR

The door has an MDF core that is framed in walnut and sandwiched between layers of veneer. The back is not fancy, its like the veneer you glued to the waterfall assembly. The front is a decorative pattern that brings the nightstand to life.

Get the ball rolling by cutting the MDF core to size. Then you'll want to rip to width the edging for the door. Then spend some time mitering the pieces and gluing them in place.

FIT THE DOOR. To prevent marring the veneer of the door it's a good idea to fit it to the case beforehand. You can use shims to position the door in the opening — you're aiming for a 1/16" gap around the perimeter. Follow this up by cutting the mortises in the edge of the door for the hinges (detail 'e').

VENEER PATTERN. The highlight of the nightstand is the patterned veneer that's adhered to the front of the door. The box above shows how we went about making it. For more insight on making the veneer pattern, go to *Woodsmith.com/274* for details. After the pattern is assembled with veneer tape you can glue it to the door (Figure 2). Then trim it flush as you see in Figure 3.

Once you've installed the hinges (detail 'e') and the door catch (detail 'f'), all that's left to do is install the door knob (it's centered on the veneer pattern). With that, you can take a moment to stretch — and enjoy the rewards of shop life. W

Materials, Supplies & Cutting Diagram

A	Sides (2)	3/4 x 15 - 30	**G**	Divider (1)	3/4 x 14 3/4 - 15	**M**	Door Edging	3/4 x 1 - 75 rgh.
B	Nose (1)	2 x 2 - 14 1/2	**H**	Back (1)	1/4 ply. - 15 1/4 x 26 1/2	**N**	Door Back Veneer (1)	16 1/2 x 23 rgh.
C	Top (1)	3/4 MDF - 13 1/4 x 15	**I**	Shelf (1)	3/4 x 10 3/4 - 14 1/4	**O**	Door Front Veneer (1)	11 1/2 x 65 rgh.
D	Face (1)	3/4 MDF -3 1/4 x 15	**J**	Shelf Edging (1)	3/4 x 1 1/2 - 14 1/4	•	(4) Shelf Supports & (12) Sleeves	
E	Waterfall Veneer (1)	16 1/2 x 21 rgh.	**K**	Apron (1)	1 x 3 1/2 - 15 11/16	•	(2) Hinges & (1) Catch	
F	Bottom (1)	3/4 x 14 5/8 - 15	**L**	Door Core (1)	3/4 MDF - 12 1/2 x 19	•	(1) 1 3/4" Knob	

3/4" x 5 1/2"- 66" Walnut (Three Boards @ 2.5 Bd. Ft. each)

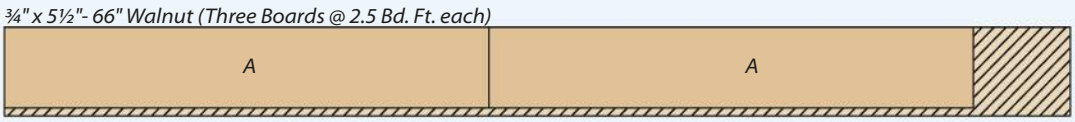

3/4" x 5 1/2"- 48" Walnut (Three Boards @ 1.8 Bd. Ft. each)

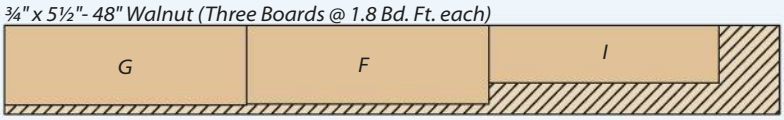

3/4" x 7"- 24" Walnut (1.2 Bd. Ft.)

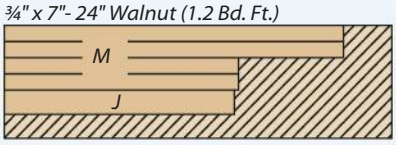

3/4" x 4 1/2"- 16" Poplar (Two Boards @ 0.5 Bd. Ft. each)

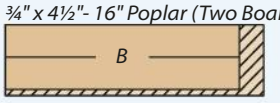

1" x 4"- 18" Walnut (0.6 Bd. Ft.)

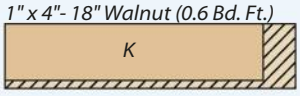

ALSO NEEDED: *One 24" x 48" Sheet of 3/4" MDF, One 24" x 48" Sheet of 1/2" Walnut Plywood*

Written by: Erich Lage; Project Design: John Doyle

▲ The classic frame and panel features of the bin allow it to play well with most any kitchen design. Using poplar lumber and birch plywood make the bin easy to paint.

▲ The drawer at the top of the cabinet is a handy place to store the plastic trash or recycle liners that are needed for the basket. The large pulls are a plus on the drawer and bin.

Kitchen Waste Bin

When it comes to return on investment, this little project pays dividends in low-key, pleasant shop time — as well as being a cabinet that's useful in the kitchen, and beyond.

The quote, "*Everything should be made as simple as possible, but not simpler,*" from Albert Einstein accurately describes the waste bin you see here. It simply does what it's supposed to do. It can be a repository for cans, bottles, cartons, and tins that will eventually find their way to a recycle center, or a waste bin.

If you shop online, or wander any number of retail outlets, you'll find versions of this cabinet tend to the extremes. Either it's so flimsy that you're not sure it will survive the trip home, or it's so expensive and complex that you might have to take out a small loan and attend night school to learn how to operate the beast.

I think it's fair to say our bin lands in the Goldilocks zone. It's a well-designed project that you'll enjoy making with mostly scraps that clutter your wood rack.

POPLAR & PLYWOOD. You could easily make this bin out of one of the big three hardwoods (oak, maple, or cherry) — and some of you rascals will. But we chose to paint this beauty, so we employed well-behaved poplar lumber and birch plywood. The stained top you see in the photos here is also made of poplar, so there's that option as well.

Illustrations: Becky Kralicek

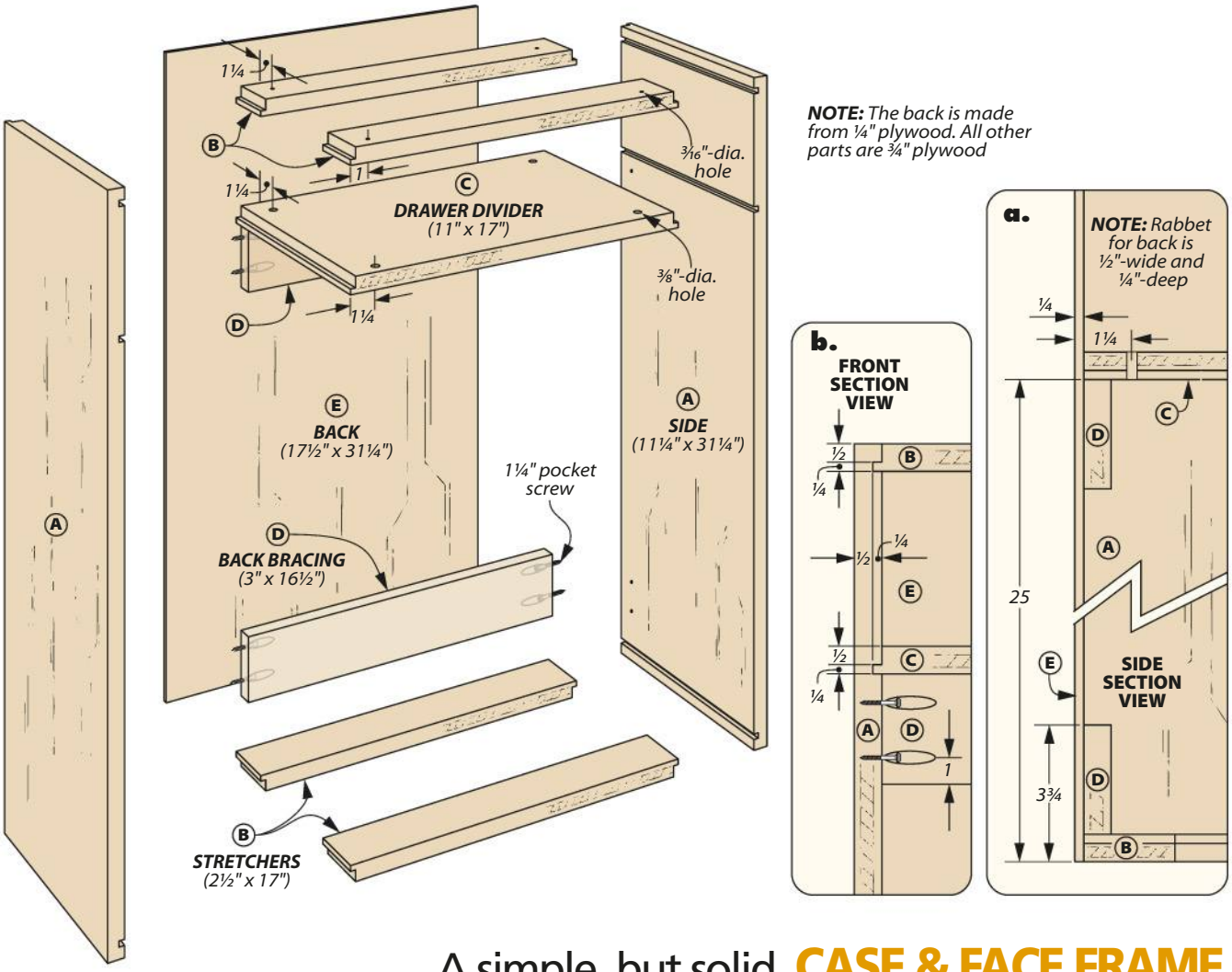

A simple, but solid CASE & FACE FRAME

BOLSTER THE BACK

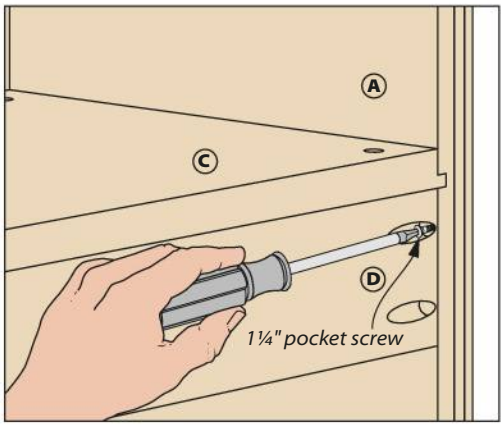

Pocket Screws. The back bracing pieces are fastened to the sides with pocket screws. The bracing is flush with the divider and rabbets.

This austere case is comprised of ten pieces of plywood — so as I mentioned earlier, there's a good chance you'll find most of what you need in your scrap rack. Once you've gathered the pieces, you can start by cutting the sides to their final size.

JOINERY. A dado set installed in your table saw is the ideal way to cut the dadoes for the stretchers (top and bottom) and the drawer divider that's in the upper portion of the sides. This is shown in the main drawing and detail 'a.' Use your rip fence as a stop for consistency, and your miter gauge to support the workpiece while the cut is being made. Often I'll hear that you should never combine the use of your rip fence and miter gauge when making a cut. This is true with a through-cut, but since we're not cutting a piece free in this instance, the procedure works fine.

To complete the sides, cut a rabbet along the rear edge for the plywood back. Now let's mill the parts that connect to the sides.

TONGUES. Start by cutting the stretchers and the drawer divider to size. The tongue profile is the same on all of these parts, it's just a matter of how they're oriented to the sides. Detail 'b' shows the tongues on the bottom edge of the upper stretchers and drawer divider. If you take a gander at the bottom stretchers in the main drawing

you'll see the boards are flipped. To make the tongues, bury a dado blade in an auxiliary fence that's attached to your rip fence.

Before gluing up the case you'll want to drill some holes in the upper stretchers and drawer divider. First, there are the pilot holes in the stretchers for attaching the top to the case. Follow those up with the access holes in the drawer divider that are large enough for a driver bit to pass through. To me it's much easier to do this than navigating a right-angle drill in the tight drawer cavity.

GLUE UP. Now you can glue up the case. At the front make sure the stretchers and divider are flush to the front edge of the sides. And at the back, hold the stretchers flush to the rabbet. Use clamping squares to ensure the case is square.

BACK BRACING & BACK. The next two parts you need to fashion are the back braces and the back. As you see in the drawing at the bottom of the previous page, the bracing will attach to the sides with pocket screws. The bracing adds rigidity to the case and provides additional surface area for attaching the back. After installing the braces, you can cut the plywood back to size and pin nail it to the case parts as well as the back bracing.

FACE FRAME

To complete the case you'll need to add the face frame you see in the drawings below. In this situation the face frame does double duty. As always, the stiles and rails clean up the case by covering up the joinery and the exposed veneer layers of the plywood. Here though, the bottom rail will serve as an ersatz hinge for the bin to pivot on (detail 'a').

FIELD FIT. Get the ball rolling by cutting the stiles and rails to width. As for the length, starting with the stiles, I cut each piece to fit by first laying it on the case and marking the length with a sharp pencil, then making the cut before gluing and clamping them in place.

Starting from the top, fit and glue each rail in place. You want the fit snug, but not so tight that they put stress on the stiles. Notice in detail 'a' that the face rails are flush to the top, and the bottom rail is flush to the bottom.

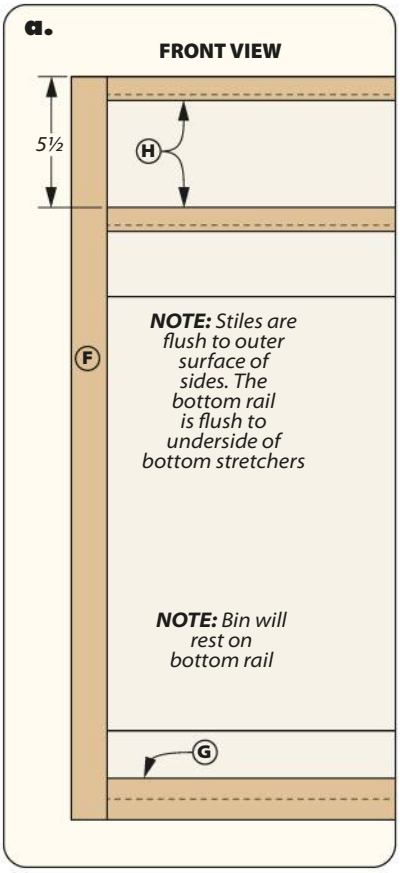

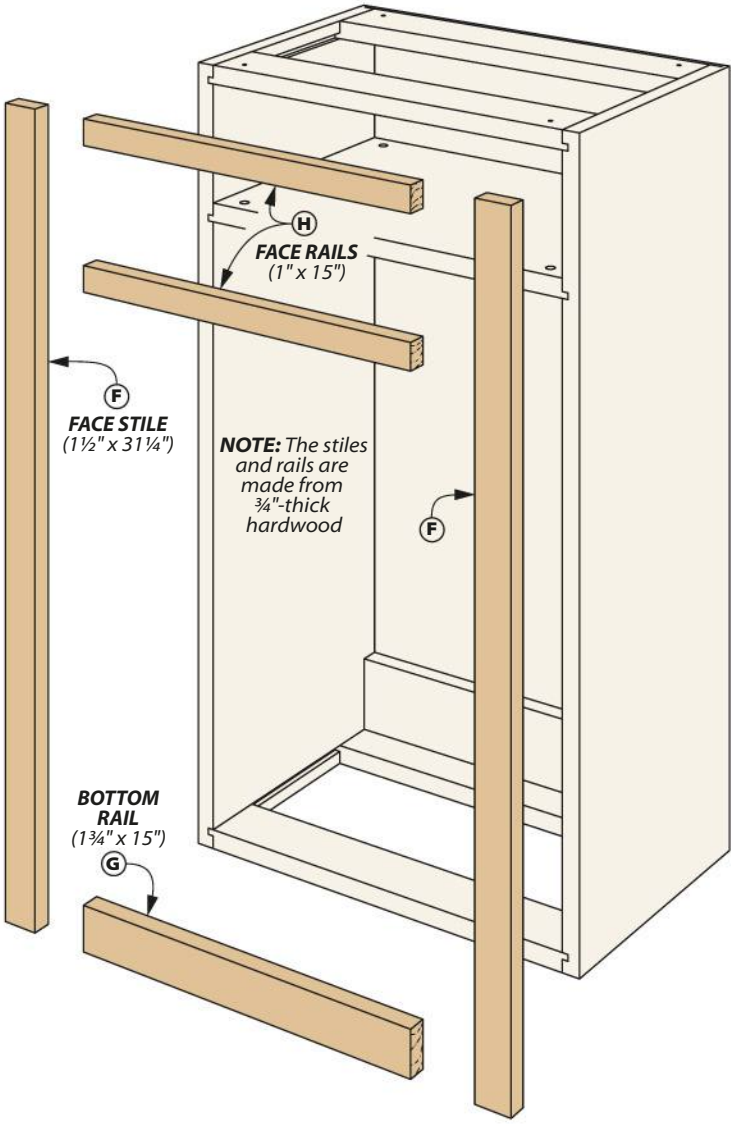

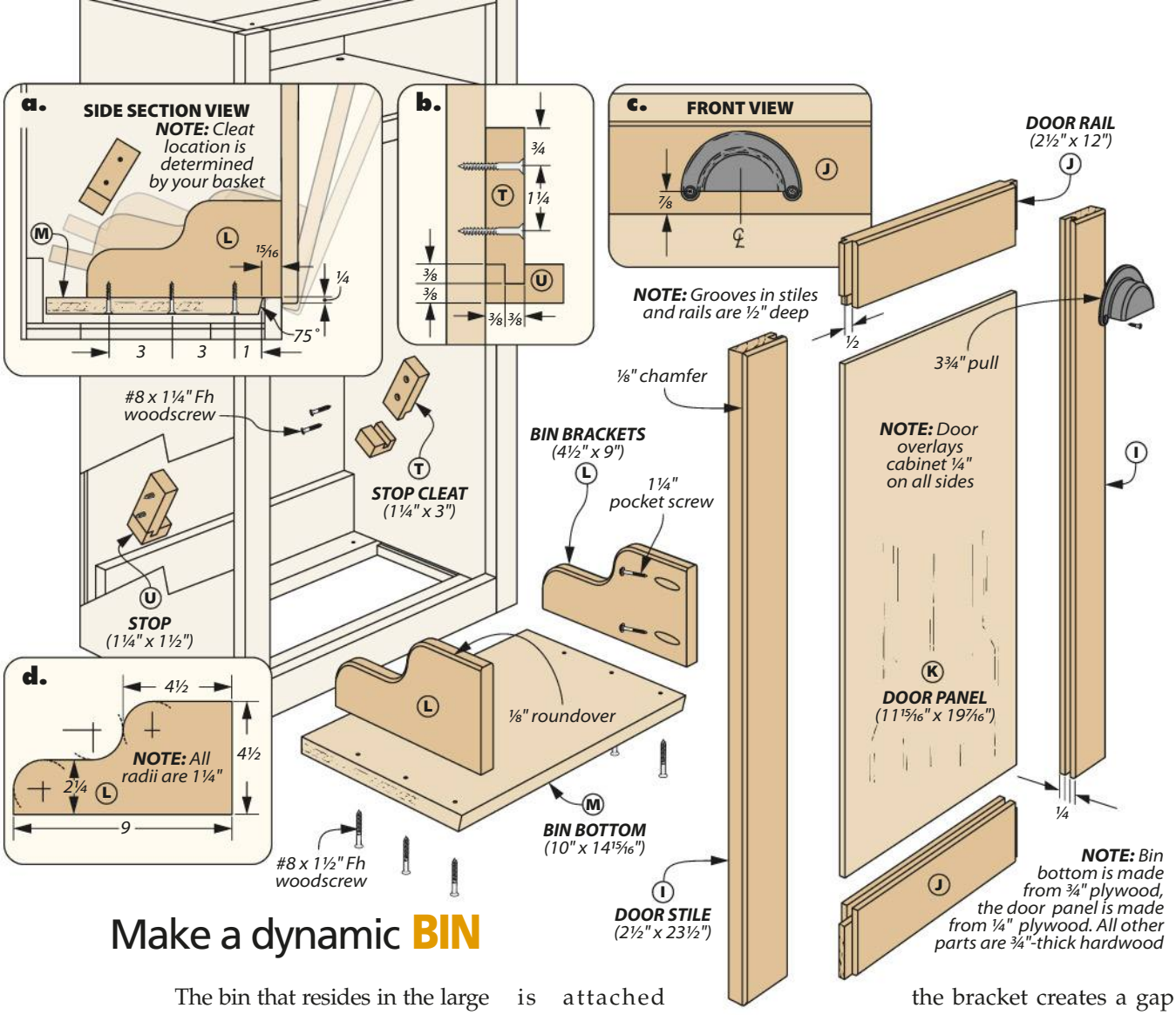

Make a dynamic **BIN**

The bin that resides in the large opening of the case is a perfect example of a simple, sturdy, yet stylish assembly. The frame and panel door adds a little class to the look of the cabinet. The door is attached to bin brackets with pocket screws, and the bottom is screwed to the underside of the brackets.

▲ The cleat prevents the bin from tumbling out of the case. The location of the cleats depends on the size of basket you choose to use.

DOOR FIRST. The door is assembled with stub tenon and groove joinery. After sizing the parts, set up your table saw to cut the grooves in the stiles and rails (the dimensions are shown in the main drawing). When the grooves are complete you can adjust the landscape of your table saw to make the stub tenons on the rails.

GLUE UP THE DOOR. A dry fit of the stiles and rails allows you to check the fit of the joinery and measure for the plywood panel. After cutting the panel to size, it's time to glue up the door.

Next up are the bin brackets. As you see in detail 'a,' the bracket creates a gap between the bottom and the door allowing the bin to straddle the bottom rail on the cabinet.

DOUBLE UP. I made one of the brackets and used it as a template for a perfectly matching pair. Rounding over the edges and drilling the pocket holes completes the brackets. As for the bin bottom, you'll notice in detail 'a' that the front edge has a slight bevel. This detail provides the bin room to smoothly tilt out of the cabinet.

It's nice that the bin will move easily in the cabinet — but you don't want it to fall out. To prevent that, it's time to make the two-part bin stop. Detail 'b' above shows the joinery needed for the stop. There's a dado in the stops that mate with the tongues in the cleat. The location of this

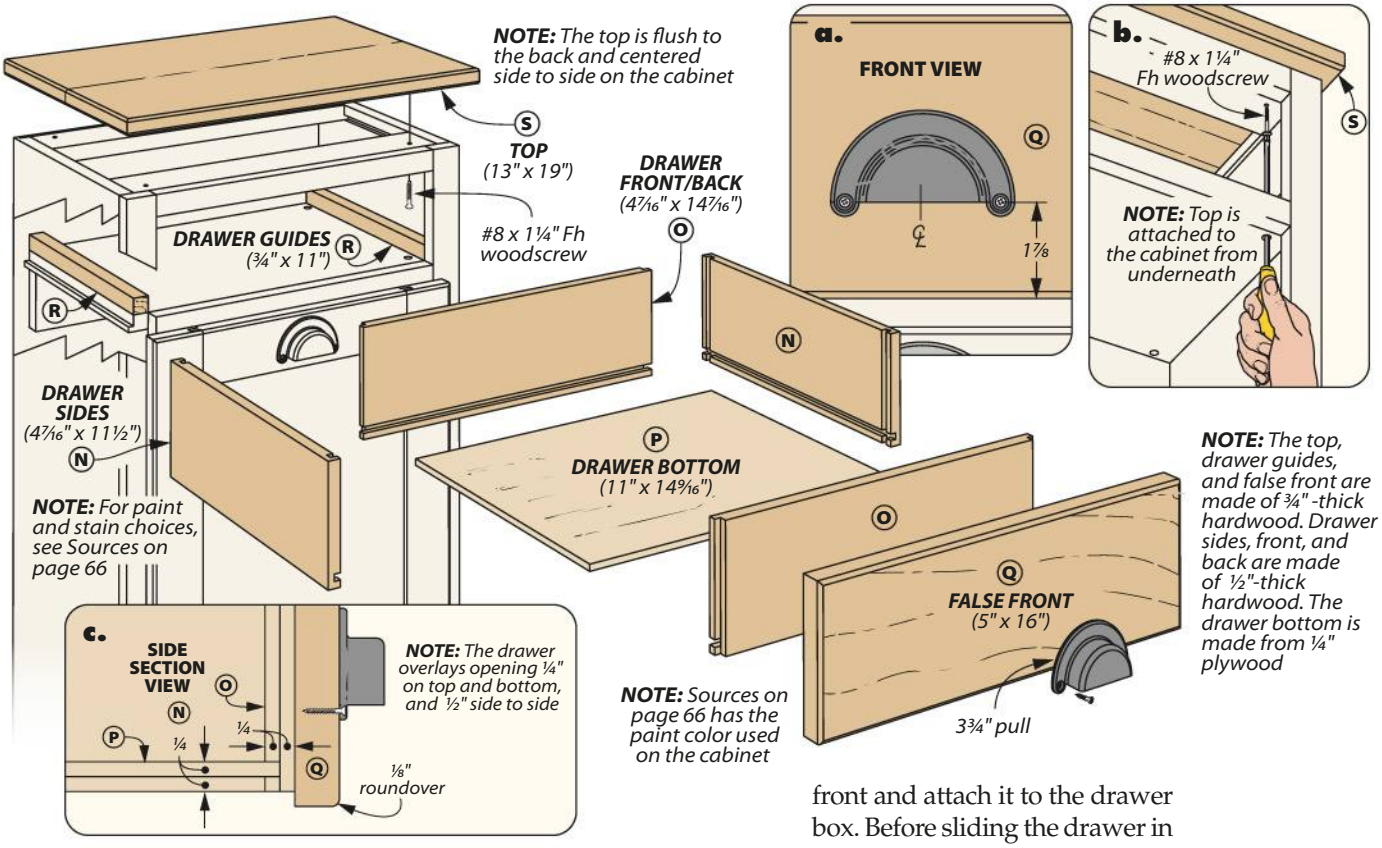

piece depends upon the waste basket you choose to use.

DRAWER & TOP

Next up is the drawer. It's strong, but simple tongue and dado joinery that's used here. Start by cutting the drawer box parts to size. Cut the dadoes in the sides. Then cut the rabbets that form the tongues in the front and back workpieces. Cut the groove along the bottom edge of the drawer parts for the drawer bottom. All these details are shown in the main drawing above and detail 'c.' Then you can glue up the drawer. Lastly, make the false front and attach it to the drawer box. Before sliding the drawer in place, glue the drawer guides in the opening. Now you can paint the cabinet.

The top is glued-up poplar that's stained to complement the painted cabinet. After the top is screwed in place (detail 'b') and the waste basket installed, the waste bin will be ready to go to work in the kitchen. W

Materials, Supplies & Cutting Diagram

A	Sides (2)	3/4 ply. - 11 1/4 x 31 1/4	J	Door Rails (2)	3/4 - 2 1/2 x 12	S	Top (1)	3/4 - 13 x 19
B	Stretchers (4)	3/4 ply. - 2 1/2 x 17	K	Door Panel (1)	1/4 ply. - 11 15/16 x 19 7/16	T	Stop Cleats (4)	3/4 - 1 1/4 x 3
C	Drawer Divider (1)	3/4 ply. -11 x 17	L	Bin Brackets (2)	3/4 - 4 1/2 x 9	U	Stops (2)	3/4 - 1 1/4 x 1 1/2
D	Back Bracing (2)	3/4 ply. - 3 x 16 1/2	M	Bin Bottom (1)	3/4 ply. - 10 x 14 15/16	•	(12) #8 x 1 1/4" Pocket Screws	
E	Back (1)	1/4 ply. - 17 1/2 x 31 1/4	N	Drawer Sides (2)	1/2 - 4 7/16 x 11 1/2	•	(4) #8 x 1 1/4" Fh Woodscrews	
F	Face Stiles (2)	3/4 - 1 1/2 x 31 1/4	O	Drawer Front/Back (2)	1/2 - 4 7/16 x 14 7/16	•	(10) #8 x 1 1/2" Fh Woodscrews	
G	Bottom Rail (1)	3/4 - 1 3/4 x 15	P	Drawer Bottom (1)	1/4 ply. - 11 x 14 7/16	•	(2) 3 3/4" Drawer Pull	
H	Face Rails (2)	3/4 - 1 x 15	Q	False Front (1)	3/4 - 5 x 16	•	(1) 35 Quart Waste Basket	
I	Door Stiles (2)	3/4 - 2 1/2 x 23 1/2	R	Drawer Guides (2)	3/4 - 3/4 x 11			

*3/4" x 9" - 72" Poplar (Two boards @ 4.5 Bd. Ft. each) *only one piece needed*

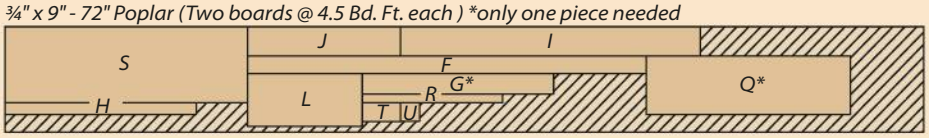

1/2" x 5" - 60" Poplar (2.1 Sq. Ft.)

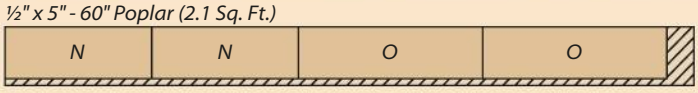

ALSO NEEDED: *One 48" x 48" Sheet of 1/4" Birch Plywood, One 48" x 48" Sheet of 3/4" Birch Plywood*

Sources

Most of the materials and supplies you'll need to build the projects are available at hardware stores or home centers. For specific products or hard-to-find items, take a look at the sources listed here. You'll find each part number listed by the company name. See the left margin for contact information.

MAIL ORDER SOURCES

Project supplies may be ordered from the following companies:

Woodsmith Store
800-444-7527
thewoodsmithstore.com

Acme Tools
877-345-2263
acmetools.com

Cabinetmaker Warehouse
866-322-3835
cabinetmakerwarehouse.com

Dutch Boy
dutchboy.com

Home Depot
800-466-3337
homedepot.com

Horton Brasses
800-754-9127
horton-brasses.com

Menards
menards.com

Oakwood Veneer Co.
800-426-6018
oakwoodveneer.com

Old Masters
712-737-3436
myoldmaster.com

Rockler
rockler.com

Shellac.net
707-299-8016

Varathane
800-901-0411
varathane.com

Veneer Supplies
veneersupplies.com

Woodcraft
800-225-1153
woodcraft.com

Woodline USA
800-472-6950
woodline.com

Woodworker Express
855-993-4968
woodworkerexpress.com

WAX FINISHING *(p.12)*

I purchased the shellac wax chunks from Shellac.net. You'll need to use the search function on the site to locate it. The blocks are available in 8oz. or 1lb. quantities.

plywood

- **Woodcraft**
  Light Brown Wax 85C27
  Tudor Brown Wax 145504
  Ebony Wax 144609
- **Rockler**
  Black Bison Clear 59949
  Beeswax 58313
- **Old Masters**
  Paste Wax 30901
  Putty Sticks . . . . . various

GREAT GEAR *(p.22)*

- **Acme Tools**
  23-Gauge Pin Nailer P635L
  ROCKET Tower 2136-20
  2-Gallon Compressor . . . 2840-20

HOKKAIDO SIDEBOARD *(p.26)*

- **Lee Valley**
  ¼" Shelf Supports 05H2042
- **Horton Brasses**
  2" Butt Hinge PB-407
  15/16"-dia. Iron Knob BK-2
  1⅛"-dia. Iron Knob BK-3
- **Rockler**
  1⅛" Magnetic Catch 26559
- **Woodline USA**
  ⅝" Bullnose Bit WL-1117

The alder used for the sideboard had a gorgeous, natural color that I accentuated with boiled linseed oil. I followed that with a few coats of lacquer for that nice, glossy sheen.

ROUND TOP BOOKCASE *(p.36)*

- **Lee Valley**
  ¼" Shelf Supports 05H2042
- **Rockler**
  10" Drawer Slides 48386
  Bronze Knob 47144
- **Oakwood Veneers**
  4' x 12' Cherry . . Website Search

At the *Oakwood Veneer* website you're looking for F/C (flat cut) cherry that's BFV (bubble free veneer). This is the material we used on the bookcase.

You'll have to search for a local source for the ⅜" bending plywood (Bendy Plywood). Full-service lumber yards, or commercial building material suppliers are the best option. The bookcase was stained with *Varathane's* "Gunstock." (The drawer box was left unstained.) Then the bookcase was finished with two coats of lacquer.

COFFEE CENTER *(p.46)*

- **Home Depot**
  110° Hinges 1002793583
  Gas Lift Supports . . . 1005178688
- **Cabinetmaker Warehouse**
  Plastic Laminate . . . 909-MC-4X8

The plywood surfaces on the coffee center were finished with our standard shop finish: two coats of catalyzed lacquer in flat. Spray lacquer provides a consistent look and gets projects ready for photos quickly. A wipe-on oil finish or a water-based finish would be good choices, too.

NIGHTSTAND *(p.52)*

- **Horton Brasses**
  2" Butt Hinge PB-407
- **Lee Valley**
  1¾"Knob 02A1575
  Shelf Pin Sleeve 63Z0513
  Shelf Pin Support 63Z0514

The wonderful walnut wood and veneers on the nightstand are protected with a couple of coats of lacquer.

KITCHEN RECYCLE BIN *(p.60)*

- **Woodworker Express**
  35 Qt. Waste Cont. RV-35-52
- **Menards**
  3¾" Pulls 4880758

The kitchen bin was painted with *Dutch Boy* semi gloss "Greened Cactus," 325-3DB. You can go to their web site *Dutchboy.com* and use their store locator to find a source near you. The top was stained with *Varathane* "Dark Walnut" stain and finished with two coats of lacquer.

RAZOR-SHARP EDGES in 5 Minutes!

The *Woodsmith* Cabinet Scraper System offers a fool-proof method for getting a consistent, razor-sharp edge using only a few simple tools. The secret is in the *Woodsmith* jig—a unique tool that lets you file the edge and then create the bur.

Item# 7512124
Woodsmith Cabinet Scraper System $59.99

OUR BOND IS OUR WORD

You're serious about your woodworking projects. So are we.

Titebond wood glues offer the proven performance, respected advice and trusted solutions you demand. We remain committed to being there with you for every project.

Titebond®

titebond.com | 1-800-347-4583

01105_5227TF

SHAPER
PRECISION CUTTING SIMPLIFIED

MASTERCLASS WITH CALEB JAMES

"I'm a traditionalist but not one that's stuck in the past."

Learn about Shaper Origin and build your own stacking chair as you follow along in this free class from chairmaker Caleb James.

Based on the Danish Modern chairmaking tradition, this Stacking Chair is both an introduction to chairmaking techniques and a template to help you design chairs of your own.

Scan QR to get your FREE project plans:
shapertools.com/caleb-james-masterclass